# MOUNTING AND OPERATING INSTRUCTIONS

**EB 6116 EN**

**Translation of original instructions**




## Type 6116 Electropneumatic Converter for Direct Current Signals

Ex certified

Edition April 2026

### Note on these mounting and operating instructions

These mounting and operating instructions (EB) assist you in mounting and operating the device safely. The instructions are binding for handling SAMSON devices. The images shown in this document are for illustration purposes only. The actual product may vary.

⇨ For the safe and proper use of these instructions, read them carefully and keep them for later reference.

⇨ If you have any additional questions not related to the contents of this document, contact SAMSON's After-sales Service (aftersalesservice@samsongroup.com).

Documents relating to the device, such as the mounting and operating instructions, are available on our website:
▶ https://www.samsongroup.com/en/downloads/documentation

### Definition of signal words

**⚠ DANGER**

*Hazardous situations which, if not avoided, will result in death or serious injury*

**⚠ WARNING**

*Hazardous situations which, if not avoided, could result in death or serious injury*

***NOTICE***

*Property damage message or malfunction*

***Note***

*Additional information*

***Tip***

*Recommended action*

**1 Safety instructions and measures ... 5**
1.1 Notes on possible severe personal injury ... 6
1.2 Notes on possible personal injury ... 6
1.3 Notes on possible property damage ... 7

**2 Markings on the device ... 8**
2.1 Nameplates ... 8
2.2 Article code ... 9

**3 Design and principle of operation ... 12**
3.1 Variants ... 14
3.2 Technical data ... 15
3.3 Ex approvals ... 17
3.4 Dimensions ... 18

**4 Shipment and on-site transport ... 22**
4.1 Accepting the delivered goods ... 22
4.2 Removing the packaging from the converter ... 22
4.3 Transporting the converter ... 22
4.4 Lifting the converter ... 22
4.5 Storing the converter ... 22

**5 Installation ... 23**
5.1 Installation conditions ... 23
5.1.1 Work position ... 23
5.1.2 Mounting position ... 23
5.2 Preparation for installation ... 23
5.3 Installing i/p converters ... 23
5.4 Mounting the i/p converter to positioners ... 25
5.5 Electrical connection ... 25
5.6 Pneumatic connection ... 26

**6 Start-up ... 29**
6.1 Checking zero and span ... 29
6.1.1 Checking zero ... 30
6.1.2 Checking span ... 30
6.2 Zero adjustment (versions with 0 to 20 mA input signal) ... 30

**7 Operation ... 31**

**8 Malfunctions ... 32**
8.1 Troubleshooting ... 32
8.2 Emergency action ... 33

**9 Servicing ... 34**
9.1 Cleaning the restrictor ... 34
9.2 Cleaning pneumatic connections ... 34

**10 Decommissioning ... 35**

**11 Removal ... 36**

**12 Repairs ... 37**
12.1 Servicing explosion-protected devices ... 37
12.2 Returning the converter to SAMSON ... 37

**13 Disposal ... 38**

**14 Certificates ... 39**

**15 Appendix ..... 60**
15.1 Parts for retrofitting and accessories ..... 60
15.2 After-sales service ..... 61

# 1 Safety instructions and measures

### Intended use

The Type 6116 i/p Converter is used to convert a direct current input signal into a pneumatic output signal for measuring and control tasks. The i/p converter is particularly suitable as an intermediate element between electric measuring devices and pneumatic controllers or between electric control devices and pneumatic control valves.

The i/p converter is designed to operate under exactly defined conditions (e.g. input signal, pressure). Therefore, operators must ensure that the i/p converter is only used in operating conditions that meet the specifications used for sizing the i/p converter at the ordering stage. In case operators intend to use the device in applications or conditions other than those specified, contact SAMSON.

SAMSON does not assume any liability for damage resulting from the failure to use the device for its intended purpose or for damage caused by external forces or any other external factors.

⇨ Refer to the technical data for limits and fields of application as well as possible uses (see Chapter 3).

### Reasonably foreseeable misuse

The product (Type 6116) is not suitable for the following applications:

– Use outside the limits defined during sizing and by the technical data

Furthermore, the following activities do not comply with the intended use:

– Use of non-original spare parts
– Performing service and repair work not described

### Qualifications of operating personnel

The product (Type 6116) must be mounted, started up, serviced and repaired by fully trained and qualified personnel only; the accepted industry codes and practices must be observed. According to the mounting and operating instructions, trained personnel refers to individuals who are able to judge the work they are assigned to and recognize possible hazards due to their specialized training, their knowledge and experience as well as their knowledge of the applicable standards.

### Personal protective equipment

SAMSON recommends checking the hazards posed by the plant and the process medium being used (e.g. ▶ GESTIS hazardous substances database.

⇨ Provide protective equipment (e.g. safety gloves, eye protection) appropriate for the material safety data sheet.

⇨ Check with the plant operator for details on further protective equipment.

### Revisions and other modifications

Revisions, conversions or other modifications of the product (Type 6116) are not authorized by SAMSON. They are performed at the user's own risk and may lead to safety hazards, for example. Furthermore, the product may no longer meet the requirements for its intended use. Use of the device is no longer permitted in this case.

### Warning against residual hazards

To avoid personal injury or property damage, operators and operating personnel must prevent hazards that could be caused in the product (Type 6116) by the process medium and operating pressure by taking appropriate precautions. Plant operators and operating personnel must observe all hazard statements, warnings and caution notes in these mounting and operating instructions, especially for installation, start-up and service work.

### Responsibilities of the operator

Operators are responsible for proper use and compliance with the safety regulations. Operators are obliged to provide these mounting and operating instructions to the operating personnel and to instruct them in proper operation. Furthermore, operators must ensure that operating personnel or third parties are not exposed to any danger.

### Responsibilities of operating personnel

Operating personnel must read and understand these mounting and operating instructions as well as the specified hazard statements, warnings and caution notes. Furthermore, operating personnel must be familiar with the applicable health, safety and accident prevention regulations and comply with them.

### Referenced standards, directives and regulations

The product (Type 6116) with a CE marking fulfills the requirements of the following Directives:

(Type 6116-0)

– RoHS Directive 2011/65/EU

– EMC Directive 2014/30/EU

(Type 6116-1 and -2)

– RoHS Directive 2011/65/EU

– EMC Directive 2014/30/EU

– ATEX Directive 2014/34/EU

The product (Type 6116) with an EAC marking fulfills the requirements of the following Regulations for the Eurasian Economic Union (EAEU):

– TR CU 012/2011
– TR CU 020/2011

The declarations of conformity and certificates are included in Chapter 14.

For electrical installation, observe the relevant electrotechnical regulations and the accident prevention regulations that apply in the country of use. In Germany, these are the VDE regulations and the accident prevention regulations of the employers' liability insurance.

⇨ For installation in hazardous areas, observe the relevant standards that apply in the country of use.

Standard applicable in Germany: DIN EN 60079-14 (VDE 0165-1): Explosive Atmospheres – Electrical Installations Design, Selection and Erection. The maximum permissible values specified in the EC-type examination certificates apply when interconnecting intrinsically safe electrical equipment ($U_i$ or $U_0$, $I_i$ or $I_0$, $P_i$ or $P_0$, $C_i$ or $C_0$ and $L_i$ or $L_0$).

**Referenced documents**

The following documents apply in addition to these mounting and operating instructions:

– Safety Manual ▶ SH 6116

## 1.1 Notes on possible severe personal injury

**⚠ DANGER**

**Risk of fatal injury due to the ignition of an explosive atmosphere.**

Incorrect installation, operation or maintenance of the device (Type 6116) in potentially explosive atmospheres may lead to ignition of the atmosphere and ultimately to death, even with a harmless supply voltage.

⇨ The following regulations apply to installation in hazardous areas: DIN EN 60079-14 (VDE 0165-1).

⇨ Installation, operation or maintenance of the position transmitter is to be performed only by personnel who has undergone special training or instructions or who is authorized to work on explosion-protected devices in hazardous areas. Installation, operation or maintenance of the position transmitter is to be performed only by personnel who has undergone special training or instructions or who is authorized to work on explosion-protected devices in hazardous areas.

**⚠ DANGER**

**Loss of Ex d protection due to opening the enclosure cover or damage to the cover's thread and/or the connecting thread.**

⇨ The enclosure cover must be firmly closed during operation.

⇨ Put the converter out of operation when its cover thread or connecting thread is damaged. Replace it with a new device.

## 1.2 Notes on possible personal injury

**⚠ WARNING**

The device (Type 6116) poses no hazard with possible personal injury.

⇨ Check with the plant operator for details on possible personal injury which could be caused by the plant and ambient conditions (e.g. process medium, temperature).

**⚠ WARNING**

**Damage to health relating to the REACH regulation.**

If a SAMSON device contains a substance listed as a substance of very high concern on the candidate list of the REACH regulation, this is indicated on the SAMSON delivery note.

⇨ Observe information on safe use of the part affected ▶ www.samsongroup.com > About SAMSON > Environment, Social & Governance > Material Compliance > REACH.

**⚠ WARNING**

**Risk of personal injury due to incorrect operation, use or installation as a result of information on the device being illegible.**

Over time, markings, labels and nameplates on the device may become covered with dirt or become illegible in some other way. As a result, hazards may go unnoticed and the necessary instructions not followed. There is a risk of personal injury.

⇨ Keep all relevant markings and inscriptions on the device in a constantly legible state.

⇨ Immediately renew damaged, missing or incorrect nameplates or labels.

**⚠ WARNING**

**Risk of personal injury due to exhaust air being vented.**

While in operation, the converter vents exhaust air over the vent plug.

⇨ Locate the vent plug on the opposite side to the work position of operating personnel.

## 1.3 Notes on possible property damage

***NOTICE***

**A zero shift, malfunction or device damage may occur due to shocks or jolting.**

Shocks can cause a zero shift which impairs the correct functioning.

⇨ Protect the device against external influences (e.g. impact, shocks).

⇨ Check zero, if necessary (see Chapter 6).

***NOTICE***

**Risk of malfunction due to failure to comply with air quality requirements.**

An insufficient air quality may lead to the output signal not being proportional to the input signal.

⇨ Make sure that the air quality complies with the requirements (see Chapter 3.2).

⇨ Check the air filter and separator installed in the upstream air reducing station regularly.

# 2 Markings on the device

## 2.1 Nameplates

The nameplates shown were up to date at the time of publication of this document. The nameplate on the device may differ from the one shown.

### Type 6116, explosion-protected version

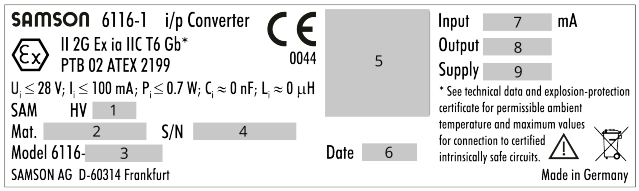


1 Hardware version
2 Material number
3 Model number
4 Serial number
5 Identification code (scannable)
6 Date of manufacture
7 Input signal (electric)
8 Output signal (pneumatic)
9 Supply pressure

### Type 6116, version without explosion protection

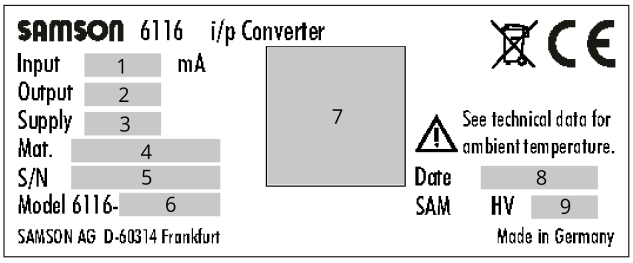


1 Input signal (electric)
2 Output signal (pneumatic)
3 Supply pressure
4 Material number
5 Serial number
6 Model number
7 Identification code (scannable)
8 Date of manufacture
9 Hardware version

**i *Note***

*The Types 6109 and 6112 i/p Converter Modules installed have their own nameplates. They are different than the nameplate of the i/p converter.*

### Location of the nameplate

The nameplate is affixed with grooved pins to the side of the i/p converter.

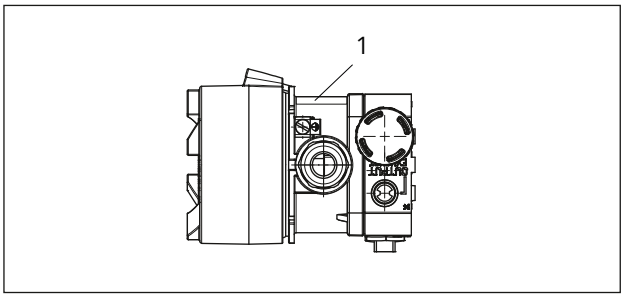


**Fig. 1:** *Location of the nameplate · Type 6116*

1 Nameplate

## 2.2 Article code

| | | Type 6116- | x | x | x | x | x | x | x | x | x | x | x | x | x | x | x |
|---|---|---|---|---|---|---|---|---|---|---|---|---|---|---|---|---|---|
| Explosion protection | | | \| | \| | \| | \| | \| | \| | \| | \| | \| | \| | \| | \| | \| | \| | \| |
| Without | | | 0 | \| | \| | \| | \| | \| | \| | \| | \| | \| | \| | \| | \| | \| | \| |
| ATEX[1) 2)14)] | II 2G Ex ia IIC T6 Gb | | 1 | \| | \| | \| | \| | \| | \| | \| | 1/2 | \| | \| | \| | \| | \| |
| ATEX[3)] | II 2 G Ex d IIC T6;<br>II 2G Ex d IIC T6/T5/T4 Gb | | 2 | \| | \| | \| | \| | \| | \| | \| | \| | \| | \| | \| | \| | \| |
| CSA[5)12)] | Class I, Groups B, C, D | | 3 | \| | \| | \| | 0 | 1...5 | \| | 1/2 | \| | 0...3 | \| | \| | \| | \| |
| | Class II, Groups E, F, G | | \| | \| | \| | \| | \| | \| | \| | \| | \| | \| | \| | \| | \| | \| |
| | Class III; Type 4 Enclosure[15)18)] | | \| | \| | \| | \| | \| | \| | \| | \| | \| | \| | \| | \| | \| | \| |
| FM[1)] | Class I, Groups B, C, D | | \| | \| | \| | \| | \| | \| | \| | 1 | \| | 0/3 | \| | \| | \| | \| |
| | Class II, Groups E, F, G | | \| | \| | \| | \| | \| | \| | \| | \| | \| | \| | \| | \| | \| | \| |
| | Class III | | \| | \| | \| | \| | \| | \| | \| | \| | \| | \| | \| | \| | \| | \| |
| CSA[1)14)] | Ex ia IIC T6; Class I, Zone 0 | | 4 | \| | \| | \| | \| | \| | \| | \| | 3 | \| | \| | \| | \| | \| |
| | Class I, Div. 1, Groups A, B, C, D | | \| | \| | \| | \| | \| | \| | \| | \| | \| | \| | \| | \| | \| | \| |
| | Class II, Div. 1, Groups E, F, G; Class III | | \| | \| | \| | \| | \| | \| | \| | \| | \| | \| | \| | \| | \| | \| |
| | Class I, Div.2, Groups A, B, C, D | | \| | \| | \| | \| | \| | \| | \| | \| | \| | \| | \| | \| | \| | \| |
| | Class II, Div. 2, Groups E, F, G; Class III | | \| | \| | \| | \| | \| | \| | \| | \| | \| | \| | \| | \| | \| | \| |
| | Type 4 Enclosure | | \| | \| | \| | \| | \| | \| | \| | \| | \| | \| | \| | \| | \| | \| |
| FM[1)14)] | IS, ClassI, II, III; Div. 1, Groups A–G | | \| | \| | \| | \| | \| | \| | \| | \| | \| | \| | \| | \| | \| | \| |
| | Class I, Zone 0 AEx ia IIC | | \| | \| | \| | \| | \| | \| | \| | \| | \| | \| | \| | \| | \| | \| |
| | NI, Class I, Div. 2, Groups A, B, C, D | | \| | \| | \| | \| | \| | \| | \| | \| | \| | \| | \| | \| | \| | \| |
| | Type 4X Enclosure | | \| | \| | \| | \| | \| | \| | \| | \| | \| | \| | \| | \| | \| | \| |
| IECEx[4)6)] | Ex d IIC T6/T4 | | 5 | \| | \| | \| | 0 | 1/2 | \| | 1 | \| | 0/2 | \| | \| | \| | \| |
| IECEx[1)14)] | Ex ia IIC T6; Ex nA IIC T6 | | 6 | 2 | \| | \| | \| | \| | \| | \| | \| | 2 | \| | \| | \| | \| |
| JIS[4)15)] | Ex d IIC T6 | | 7 | \| | \| | \| | 0 | 1/2 | \| | \| | \| | \| | \| | \| | \| | \| |
| | | | \| | \| | \| | \| | \| | \| | \| | \| | \| | \| | \| | \| | \| | \| |
| i/p converter module | | | \| | \| | \| | \| | \| | \| | \| | \| | \| | \| | \| | \| | \| | \| |
| Type 6109[4)] | | | \| | 1 | 0 | 1 | 0 | 1 | 1 | \| | \| | \| | \| | \| | \| | \| | \| |
| Type 6112 | | | \| | 2 | \| | \| | \| | \| | \| | \| | \| | \| | \| | \| | \| | \| | \| |
| | | | \| | \| | \| | \| | \| | \| | \| | \| | \| | \| | \| | \| | \| | \| |
| Input | | | \| | \| | \| | \| | \| | \| | \| | \| | \| | \| | \| | \| | \| | \| |
| 4 to 20 mA | | | \| | \| | 0 | 1 | \| | \| | \| | \| | \| | \| | \| | \| | \| | \| |
| 4 to 12 mA[1)11)] | | | \| | 2 | 0 | 3 | \| | \| | \| | \| | \| | \| | \| | \| | \| | \| | \| |
| 12 to 20 mA, without switch-off electronics[1)7)11)] | | | \| | 2 | 0 | 4 | \| | \| | \| | \| | \| | \| | \| | \| | \| | \| | \| |
| 0 to 20 mA, without switch-off electronics[7)] | | | \| | 2 | 0 | 5 | \| | \| | \| | \| | \| | \| | \| | \| | \| | \| | \| |
| 4 to 20 mA, without switch-off electronics[7)] for positioner attachment | | | \| | \| | 0 | 6 | \| | \| | \| | \| | \| | \| | \| | \| | \| | \| | \| |
| | | | \| | \| | \| | \| | \| | \| | \| | \| | \| | \| | \| | \| | \| | \| |
| Output | | | \| | \| | \| | \| | \| | \| | \| | \| | \| | \| | \| | \| | \| | \| |
| 0.2 to 1.0 bar | | | \| | \| | \| | \| | 0 | 1 | \| | \| | \| | \| | \| | \| | \| | \| |
| 3 to 15 psi | | | \| | \| | \| | \| | 0 | 2 | \| | \| | \| | \| | \| | \| | \| | \| |
| 0.4 to 2.0 bar | | | \| | 2 | \| | \| | 0 | 4 | \| | \| | \| | \| | \| | \| | \| | \| | \| |
| 6 to 30 psi | | | \| | 2 | \| | \| | 0 | 5 | \| | \| | \| | \| | \| | \| | \| | \| | \| |

## Markings on the device

| | | | | | | | | | | | | | | |
|---|---|---|---|---|---|---|---|---|---|---|---|---|---|---|
| Special ranges[8)] | | | | | | | | | | | | | | |
| Lower range value/span Δp | | | | | | | | | | | | | | |
| 0.1 to 0.4 bar/0.75 to 1.00 bar (6112, Module A) | | 2 | | | 1 | 1 | | 1 | | | | | | |
| 0.1 to 0.4 bar/1.00 to 1.35 bar (6112, Module B) | | 2 | | | 1 | 2 | | 2 | | | | | | |
| 0.1 to 0.4 bar/1.35 to 1.81 bar (6112, Module C) | | 2 | | | 1 | 3 | | 3 | | | | | | |
| 0.1 to 0.8 bar/1.81 to 2.44 bar (6112, Module D) | | 2 | | | 1 | 4 | | 4 | | | | | | |
| 0.1 to 0.8 bar/2.44 to 3.28 bar (6112, Module E) | | 2 | | | 1 | 5 | | 5 | | | | | | |
| 0.1 to 0.8 bar/3.28 to 4.42 bar (6112, Module F) | | 2 | | | 1 | 6 | | 6 | | | | | | |
| 0.1 to 1.2 bar/4.42 to 5.94 bar (6112, Module G) | | 2 | | | 1 | 7 | | 7 | | | | | | |
| 0.1 to 1.2 bar/5.94 to 8.00 bar (6112, Module H) | | 2 | | | 1 | 8 | | 8 | | | | | | |
| | | | | | | | | | | | | | | |
| Direction of action | | | | | | | | | | | | | | |
| Increasing/increasing | | | | | | | 1 | | | | | | | |
| Increasing/decreasing[1)] | | | | | | | 2 | | | | | | | |
| | | | | | | | | | | | | | | |
| Electrical connection | | | | | | | | | | | | | | |
| ½ - 14 NPT | | | | | | | | 1 | | | | | | |
| M20x1.5 | | | | | | | | 2 | | | | | | |
| | | | | | | | | | | | | | | |
| Pneumatic connection | | | | | | | | | | | | | | |
| Positioner attachment (without booster)[9)] | | | 0 | 6 | 0 | 1 | 1 | | 0 | 0 | 0 | | | |
| ¼ - 18-NPT | | | | | | | | | | 1 | | | | |
| ISO-228/1 - G ¼ | | | | | | | | | | 2 | | | | |
| | | | | | | | | | | | | | | |
| Degree of protection | | | | | | | | | | | | | | |
| Without (vent plug for positioner attachment) | | | 0 | 6 | 0 | 1 | 1 | | 0 | 0 | 0 | | | |
| IP54 | | | | | | | | | | 1 | | | | |
| IP65 | | | | | | | | | | 2 | | | | |
| Type 4[10)] | | | | | | | | | | 3 | | | | |
| | | | | | | | | | | | | | | |
| Output pressure gauge | | | | | | | | | | | | | | |
| Without | | | | | | | | | | | 0 | | | |
| With[1)] | | | | | | | | | | | 1 | | | |
| | | | | | | | | | | | | | | |
| Temperature | | | | | | | | | | | | | | |
| $T_{min}$ ≥-25 °C (standard version of Type 6109) | | 1 | | | | | | | | | | 0 | | |
| $T_{min}$ ≥-45 °C (Type 6112 with metal cable gland, subjected to a routine test) | | 2 | | | | | | | | | | 1 | | |
| $T_{min}$ ≥-40 °C (standard version of Type 6112) | | 2 | | | | | | | | | | 2 | | |
| | | | | | | | | | | | | | | |
| Special version | | | | | | | | | | | | | | |
| Without | | | | | | | | | | | | | 0 | 0 | 0 |
| IECEx (Ex) approval: | | | | | | | | | | | | | | |
| Ex d IIC T6/T5/T4 Gb | 2 | | | | | | | | | | | | 2 | 5 | 1 |
| EAC Ex approval: | | | | | | | | | | | | | | |
| 1Ex ia IIC T6 Gb X | 1 | | | | | | | | | | | | 2 | 5 | 2 |
| 1Ex db IIC T6 Gb X | 2 | | | | | | | | | | | | 2 | 5 | 2 |
| KCS Korea (Ex) approval: On request | 5 | | | | | | | | | | | | 2 | 6 | 2 |

| | | | |
|---|---|---|---|
| Zero raised to a range between 0.4 and 1.5 bar/6 and 22 psi[16] | 3 | 0 | 0 |
| Zero raised to a range between 1.5 and 3.0 bar/23 and 44 psi[17] | 3 | 0 | 1 |

1) Not for positioner attachment
2) With degree of protection IP54/IP65 only
3) Supply pressure max. 6 bar; output max. 5.6 bar (not possible with 6112, Module H)
4) Only with output 0.2 to 1 bar/3 to 15 psi, supply pressure max. 6 bar
5) With ½ NPT electrical connection, degree of protection Type 4 or positioner attachment
6) With ½ NPT electrical connection, degree of protection IP65 or positioner attachment
7) Without switch-off electronics and without potentiometer for zero point and span correction
8) Specify setting range, e.g. “set to 0.1 to 4 bar”; output pressure max. 8 bar. Lower range value raised to max. 3.0 bar (special version)
9) Only with Ex d or explosion-proof according to CSA and FM standards
10) Only explosion-proof or intrinsically safe according to CSA and FM standards
11) 4 to 12 mA and 12 to 20 mA input only up to 4.0 bar span
12) Only with output 0.2 to 1 bar/3 to 15 psi and 0.4 to 2 bar/6 to 30 psi, supply pressure max. 6 bar
13) Type 6116-3: version $T_{min}$ = -45 °C only FM certification Class I, Div. 1, Groups B, C, D
14) Max. output pressure 2.0 bar not possible with Modules E, F, G, H
15) No longer available
16) Switch-off electronics only effective under certain conditions; Types 6116-0, 6116-1 (ATEX) (Modules A, B, C) and Type 6116-4 (Modules A, B, C)
17) Switch-off electronics only effective under certain conditions; Types 6116-0 and 6116-2 only (ATEX)
18) Not possible with 6112, Modules E, F, G and H

# 3 Design and principle of operation

The Type 6116 i/p Converter is used to convert a direct current input signal into a pneumatic output signal for measuring and control tasks. The converter consists of a Type 6109 or Type 6112 i/p Converter Module and a downstream volume booster. The input signal of the device is a load-dependent direct current from 4 to 20 mA or 0 to 20 mA. The output signal is a signal pressure from 0.2 to 1 bar or other ranges up to max. 8 bar.

**Principle of operation (see Fig. 4)**

When operated, the supplied direct current i flows through the plunger coil (2) located in the field of a permanent magnet (3). At the balance beam (1), the force of the plunger coil, which is proportional to the current, is balanced against the force of the dynamic backpressure $p_K$. It is created at the flapper (6) by the air jet leaving the nozzle.

The supply air (SUPPLY 8) flows to the bottom chamber of the volume booster (8). A certain amount of air determined by the diaphragm position flows past the plug sleeve (9) and leaves through the output (OUTPUT 36).

As the input current and the forces acting on the plunger coil increase, the flapper plate (6) moves closer to the nozzle (7). This causes the backpressure and the cascade pressure $p_K$ upstream of the restriction (8.2) to increase. The cascade pressure increases until it corresponds with the input current.

The increasing cascade pressure pushes the diaphragm (10) and the plug sleeve (9) downwards. As a result, the supply air causes the output pressure $p_A$ to increase until a new state of equilibrium is reached in the diaphragm chambers. When the cascade pressure drops, the diaphragm moves upward, releasing the plug sleeve and thus allowing the output pressure $p_A$ to escape through the vent plug (EXHAUST) until the forces are equal again.

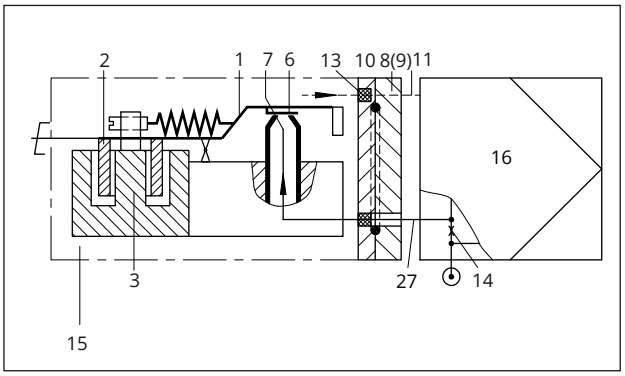


**Fig. 2:** *Functional diagram of version mounted on a positioner*

1 Balance beam
2 Plunger coil
3 Permanent magnet
6 Flapper plate
7 Nozzle
8 Connecting piece (3766)
9 Connecting piece
10 O-ring
11 Vent plug
13 Flame protection filter
14 Restrictor with air supply
15 Type 6116
16 Positioner
27 Input signal 27
⊙ Supply air

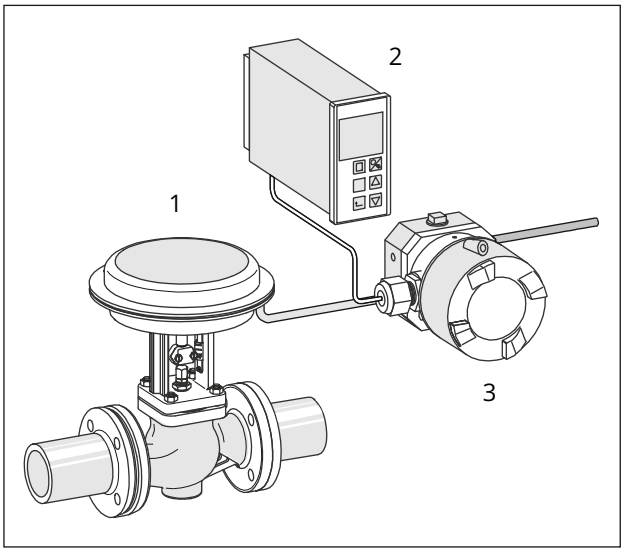


**Fig. 3:** *Application*

1 Type 3241-1
2 TROVIS 6493
3 Type 6116

### Switch-off electronics

Devices with an input range from 4 to 20 mA have a slide switch which activates the switch-off electronics (see Fig. 5).

This function allows the input signal to be set to 0 mA when the signal falls below the switching point of 4.08 mA. This causes the pneumatic output to be vented to approximately 100 mbar. This guarantees, for example the tight shut-off function of a valve. This function requires a characteristic which passes through the zero point, for example at an output signal of 0.2 to 1 bar.

If the characteristic line does not pass through zero (e.g. for an allocated output signal from 0.8 to 2.7 bar), the pneumatic output is vented to a remaining pressure of approx. 0.3 bar when the switch-off electronics are activated.

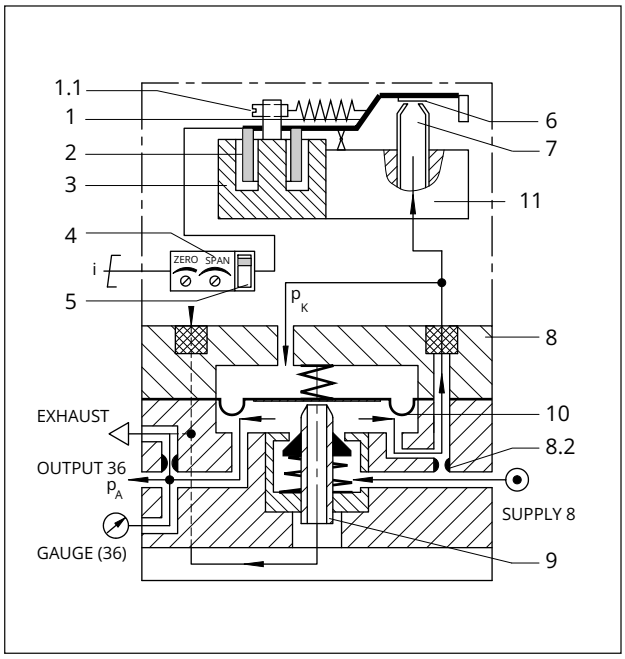


**Fig. 4:** *Functional diagram*

1 Balance beam
1.1 Zero point adjuster (Type 6112; only in version without electronics)
2 Plunger coil
3 Permanent magnet
4 Zero and span potentiometers (only in version with electronics)
5 Slide switch for switch-off electronics (only in version with electronics)
6 Flapper plate
7 Nozzle
8 Volume booster
8.2 Fixed restriction
9 Sleeve
10 Diaphragm
$p_A$ Output pressure
$p_K$ Backpressure (cascade pressure)
11 Type 6109/6112 i/p Module
⊙ Supply air

## 3.1 Variants

**i** ***Note***

*The nameplate and article code provide details on the device version (see Chapter 2).*

### Versions for safe areas

Type 6116-0...

### Versions for hazardous areas

Type 6116-1... Ex i acc. to ATEX and EAC
Type 6116-2... Ex d acc. to ATEX, IEC and EAC
Type 6116-3... Explosion-proof acc. to CSA and FM standards
Type 6116-4... Intrinsically safe according to CSA and FM standards
Type 6116-5... Explosion-proof/IEC/Australia/Korea
Type 6116-6... Intrinsically safe/IEC/Australia
Type 6116-7... Ex d according to JIS standard/Japan

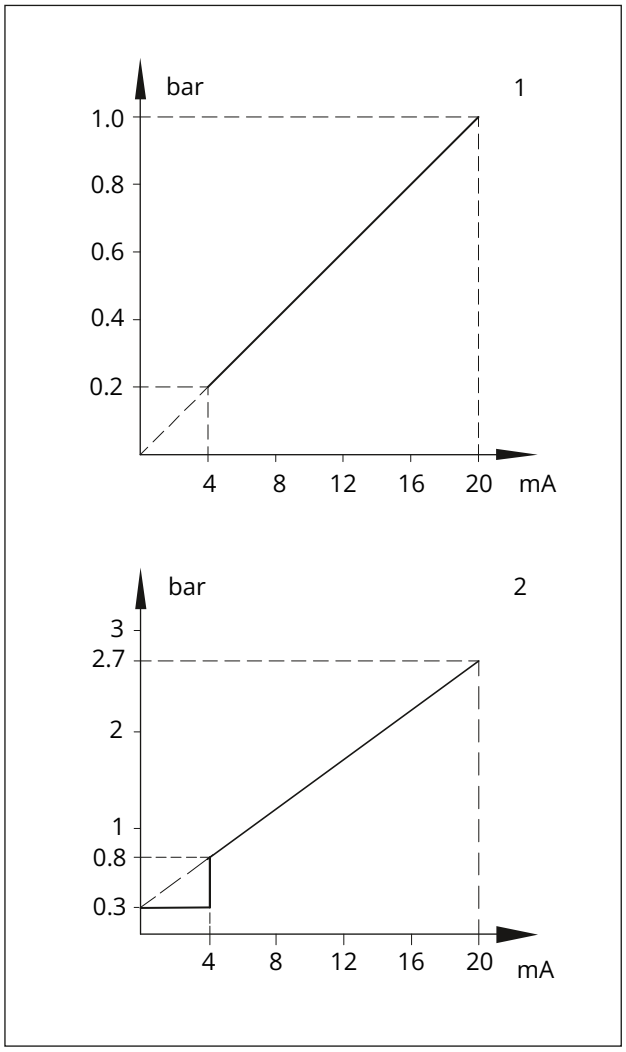


**Fig. 5:** *Output and remaining pressure*

1 0.2 to 1 bar output, remaining pressure approx. 0.1 bar
2 0.8 to 2.7 bar output, remaining pressure approx. 0.3 bar

### Further versions

| | | |
|---|---|---|
| **Type 6116-x2xxxxxxxx1...** | Temperatures down to –45 °C | |
| **Type 6116-0...** | AS-interface connection with Type 6150 Slave<br>Voltage input (e.g. 0 to 10 V) with Type 6151 u/i Module | |
| **i/p converter without booster unit or switch-off electronics** | Converters can be combined with SAMSON **Type 3760**, **Type 3766-000** (model index .02 and higher) and **Type 4765** Pneumatic Positioners (see Chapter 5.4). | |
| **Type 6116-xx060111000...** | Attachment to p/p positioners (½ NPT electrical connection) | |
| **Type 6116-xx060112000...** | Attachment to p/p positioners (M20x1.5 electrical connection) | |
| **Type 6116-xx06011x000xxxx (for positioner attachment)**<br>(with Type 6109 i/p Converter Module only) | Input: | 4 to 20 mA [1], internal resistance approx. 200 Ω at 20 °C |
| | Output: | 0.2 to 1 bar for positioner |

[1] Other signals on request

Other data same as standard version.

## 3.2 Technical data

**Table 1:** *Technical data*

| | |
|---|---|
| **Type** | **6116-0, without explosion protection** |
| **Types** | **6116-1/-2/-3/-4/-5/-6/-7 with explosion protection** |
| **Input** [5] | 4 to 20 mA, other signals on request<br>Minimum current >3.6 mA, load impedance ≤6 V (corresponding to 300 Ω at 20 mA)<br>Versions with explosion protection:<br>Load impedance 7 V (corresponding to 350 Ω at 20 mA)<br>Versions without switch-off electronics: $R_i$ = 200 Ω ± 7.5 % |
| **Output** [5] | 0.2 to 1 bar/3 to 15 psi (Type 6109 i/p Converter Module)<br>0.4 to 2 bar/6 to 30 psi (Type 6112 i/p Converter Module)<br>Special ranges adjustable according to customer specifications: |
| | **Output range = Lower range value [10] + Span Δp with Type 6112 i/p Converter Module)**<br>0.1 to 0.4 bar + 0.75 to 1.0 bar, Module A<br>0.1 to 0.4 bar + 1.0 to 1.35 bar, Module B<br>0.1 to 0.4 bar + 1.35 to 1.81 bar, Module C<br>0.1 to 0.8 bar + 1.81 to 2.44 bar, Module D<br>0.1 to 0.8 bar + 2.44 to 3.28 bar, Module E<br>0.1 to 0.8 bar + 3.28 to 4.42 bar, Module F<br>0.1 to 1.2 bar + 4.42 to 5.94 bar, Module G<br>0.1 to 1.2 bar + 5.94 to 8.0 bar, Module H [9] |
| Max. air output capacity [3] | 2.0 m³/h with an output of 0.6 bar (0.2 to 1.0 bar)<br>2.5 m³/h with an output of 1.2 bar (0.4 to 2.0 bar)<br>8.5 m³/h with an output of 5.0 bar (0.1 to 8.0 bar) |
| **Supply** | At least 0.4 bar above the upper signal pressure range value,<br>max. 10 bar without supply pressure regulator,<br>max. 6 bar for Ex d version |
| Air quality acc. to ISO 8573-1: 2001 | Max. particle size and density: Class 4 · Oil content: Class 3 · Pressure dew point: Class 3 or at least 10 K below the lowest ambient temperature to be expected |
| Air consumption[2] | 0.08 mn³/h at 1.4 bar<br>0.1 mn³/h at 2.4 bar<br>Max. 0.26 mn³/h at 10 bar |

| | | |
|---|---|---|
| **Type** | | **6116-0, without explosion protection** |
| **Types** | | **6116-1/-2/-3/-4/-5/-6/-7 with explosion protection** |
| **Characteristic** | | Characteristic: Output linear to input |
| | Hysteresis | ≤0.3 % of upper range value |
| | Deviation from terminal-based conformity | ≤1 % of upper range value (for upper range values up to 5 bar); more exact values on request<br>≤1.5 % of upper range value (for upper range values above 5 bar) |
| | Influence in % of upper range value | Supply air: 0.1 %/0.1 bar [2] |
| | | Alternating load, supply air failure, interruption of the input current: <0.3 % |
| | | Ambient temperature: lower range value <0.03 %/K, span <0.03 %/K |
| **Dynamic response** | | |
| | Limiting frequency | 5.3 Hz |
| | Phase shift | -130° |
| Variable position | | Max. 3.5 % depending on how the device is attached: ±1 % in horizontal position (Type 6109)<br>Max. 1 % depending on how the device is attached: ±0.3 % in horizontal position (Type 6112) |
| **Ambient conditions, degree of protection, compliance and weight** | | |
| Storage temperature | | -45 to +80 °C |
| Ambient temperature [11] | | |
| | With Type 6109 | -30 to +70 °C; -30 to +60 °C [1] |
| | With Type 6112 | -40 to +70 °C; -40 to +60 °C [1] [7] |
| Degree of protection | | IP54 [4], IP65 [8], Type 4 |
| Conformity | | |
| **Explosion protection** | | |
| ATEX, IECEx, ... | | See Chapter 15.1 |
| **Materials** | | |
| Enclosure | | Die-cast aluminum, chromated and plastic coated |
| Cable gland (standard) [12] | | Black polyamide (6 to 12 mm clamping range, -20 to +80 °C) |
| Weight | | |
| | | 0.85 kg |
| EMC | | According to EN 50081-1 and EN 50081-2 |
| RoHS compliance | | According to EN 61000-6-2, EN 61000-6-3 and EN 61326-1 |
| Conformity | | CE · EAC |

1) Details (including electric specifications and installation instructions) in Chapter 14 (EC type examination certificate)
2) Measured with average output pressure
3) Measured with hose with 4 mm inside diameter
4) Observe recommended mounting position.
5) See Chapter 3 when combined with a positioner
6) Devices without explosion protection
7) Special version lower than -45 °C on request
8) Possible by using accessories
9) The max. possible output pressure is 8 bar.
10) Lower range value raised up to 3.0 bar (special version)
11) Metal cable glands and vent plugs are required for temperatures below -20 °C.
12) Devices with type of protection “Flameproof enclosure” are delivered without cable gland.

## 3.3 Ex approvals

| Type | Certificate | | | Type of protection/comments |
|---|---|---|---|---|
| 6116-1 | **ATEX** | Number<br>Date | PTB 02 ATEX 2199<br>2003-03-07 | II 2G Ex ia IIC T6 Gb |
| | **TR CMU 1055** | Number<br>Date | ZETC/38/2021<br>2021-07-26 | II 2G Ex ia IIC T6 Gb |
| | **TR CMU 1055** | Number<br>Date<br>Valid until | ZETC/027/2024<br>2024-04-22<br>2027-08-24 | MODUL D |
| | **EAC Ex** | Number<br>Date<br>Valid until | KZ.7500525.01.01.02380<br>2026-01-28<br>2031-01-27 | 1Ex ia IIC T6 Gb X |
| 6116-2 | **IECEx** | Number<br>Date | IECEx BVS 14.0066 X<br>2014-07-01 | Ex d IIC T* Gb |
| | **ATEX** | Number<br>Date | BVS 14 ATEX E 104 X<br>2014-06-27 | II 2G Ex db IIC T* Gb |
| | **TR CMU 1055** | Number<br>Date | ZETC/38/2021<br>2021-07-26 | II 2G Ex d IIC T* Gb |
| | **TR CMU 1055** | Number<br>Date<br>Valid until | ZETC/027/2024<br>2024-04-22<br>2027-08-24 | MODUL D |
| | **EAC Ex** | Number<br>Date<br>Valid until | KZ.7500525.01.01.02380<br>2026-01-28<br>2031-01-27 | 1Ex db IIC T6 Gb X |
| 6116-3 | **CSA** | Number<br>Date | 1471157<br>2014-11-14 | Class I, Groups B, C, D<br>Class II, Groups E, F, G<br>Class III<br>Type 4 Enclosure |
| | **FM** | Number<br>Date | FM21US0094X<br>2022-02-17 | Class I, Grps B, C, D<br>Class II, Grps E, F, G<br>Class III<br>T6 Ta = -40°C to +60°C; Type 4X |
| 6116-4 | **CSA** | Number<br>Date | 1607866<br>2024-06-17 | Ex ia IIC T6; Class I Zone 0<br>Class I, Div. 1, Groups A, B, C, D<br>Class II, Div. 1, Groups E, F, G<br>Class III<br>Class I, Div.2, Groups A, B, C, D<br>Class II, Div. 2, Groups F, G<br>Class III<br>Type 4 Enclosure |
| | **FM** | Number<br>Date | FM24US0232<br>2025-01-02 | IS Class I, II, III, Div. 1,GP A, B, C, D, E, F, G, T* Type 4X<br>IS Class I, Zn 0, AEx ia IIC, T*<br>NI Class I, Div. 2, GP A, B, C, D, F, G T*<br>T* = Temperature Class and Ambient Temperature Range per Dwg. Addendum to EB 6116 EN |
| 6116-5 | **IECEx** | Number<br>Date | IECEx TSA 05.0015<br>2005-04-22 | Ex d IIC T6/T4 |
| | **KCS** | Number<br>Date<br>Valid until | 11-KB4BO-0213<br>2011-10-24<br>2026-10-24 | Ex d IIC T6/T4 |
| 6116-6 | **IECEx** | Number<br>Date | IECEx TSA 05.0008X<br>2005-04-04 | Ex ia IIC T6<br>Ex nA IIC T6 |

## 3.4 Dimensions

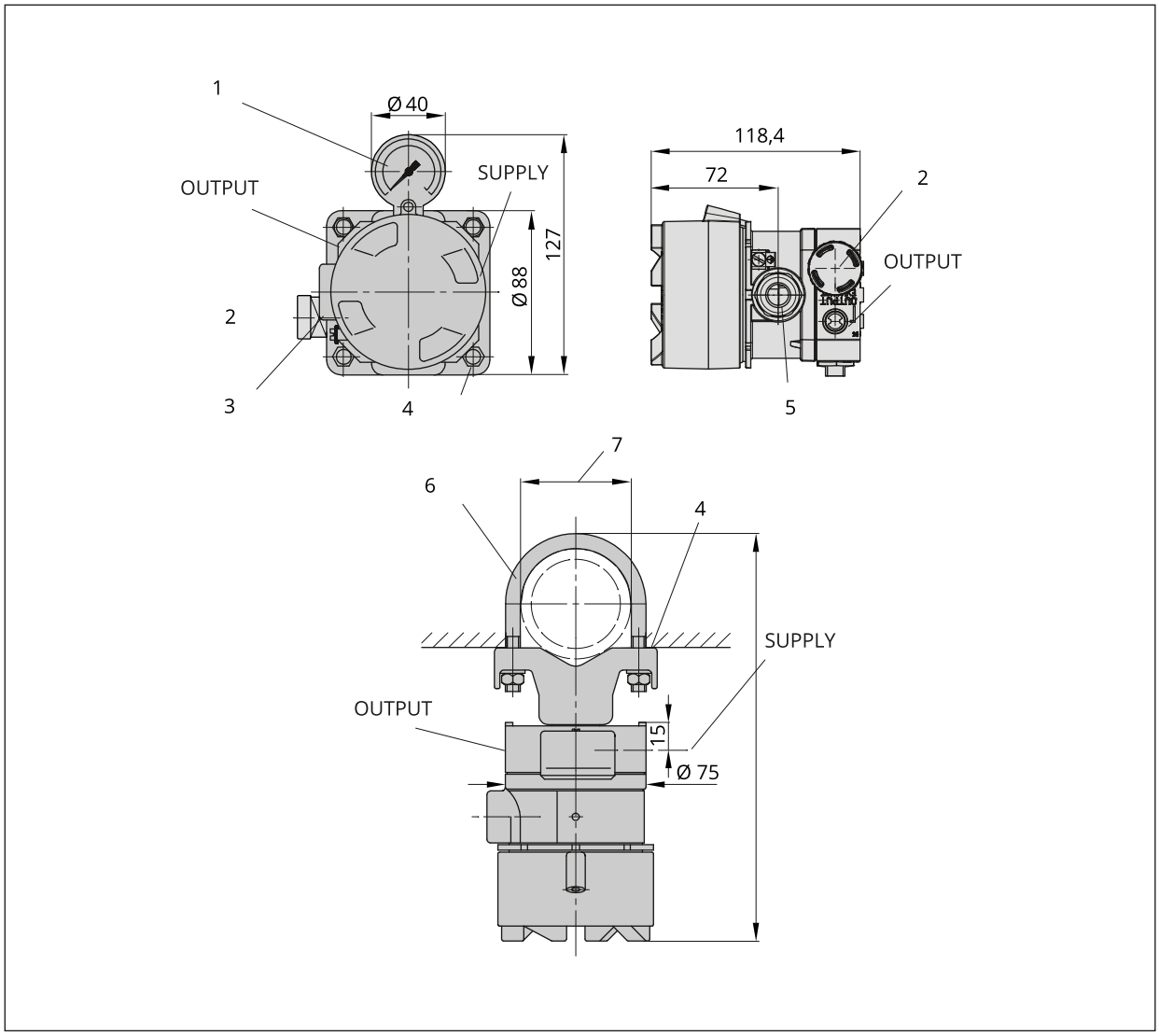


**Fig. 6:** *Dimensions in mm · Wall and pipe mounting*

1 Pressure gauge
2 Exhaust (vent plug) IP65
3 M20x1.5 or ½-14 NPT for electrical connection
4 Wall mounting
5 Cable gland
6 Clamp for attachment to 2" pipe
7 Ø 2" pipe

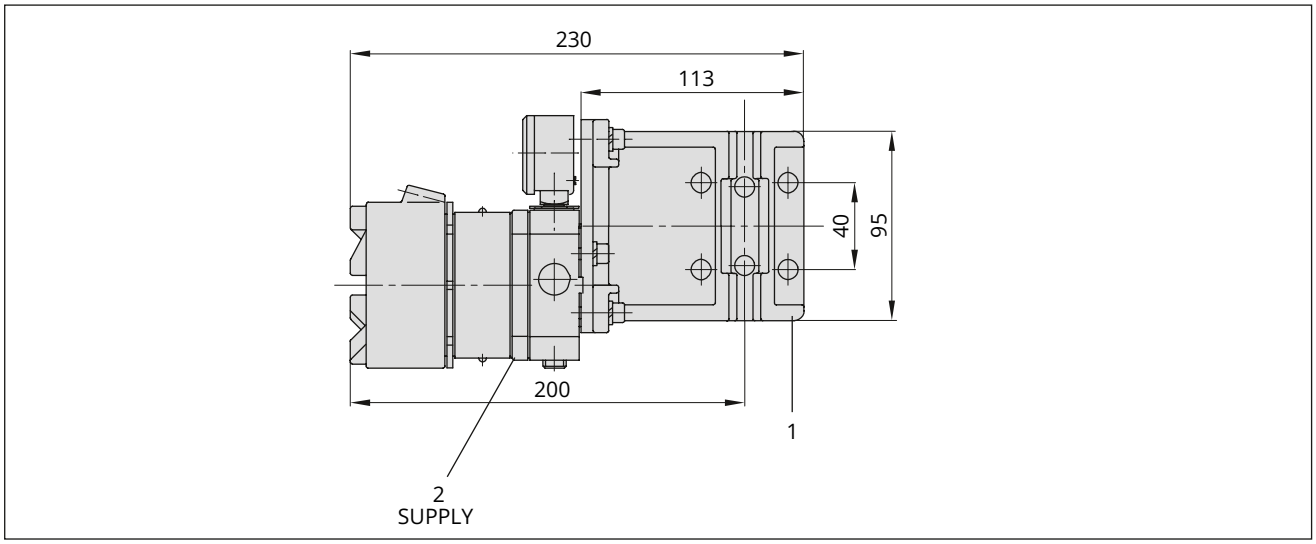


**Fig. 7:** *Dimensions in mm · Version with yoke*

1 Valve attachment
2 ¼-18 or G ¼

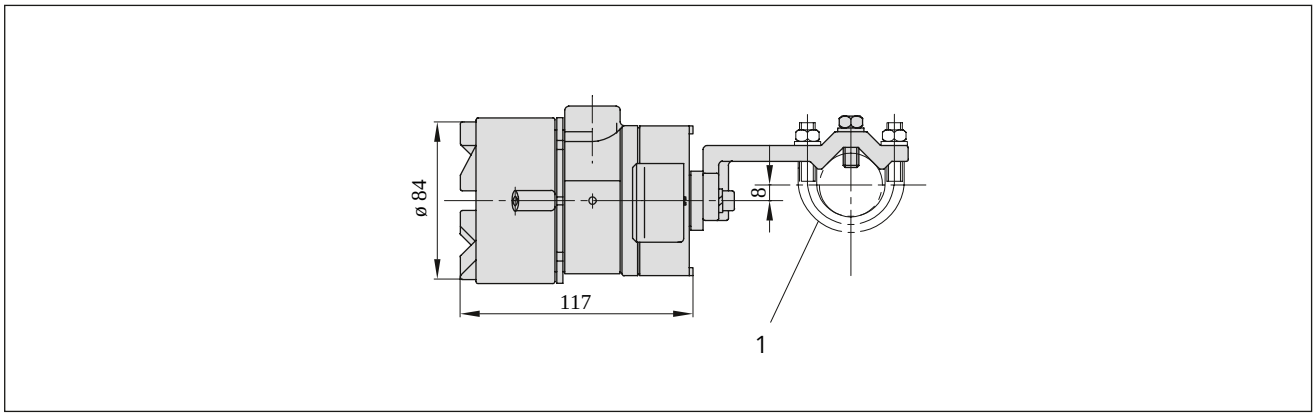


**Fig. 8:** *Dimensions in mm · Version with rod-type yoke*

1 Attachment to valves with rod-type yokes

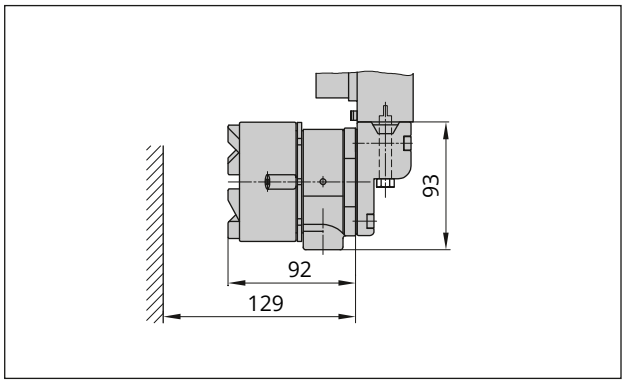


**Fig. 9:** *Dimensions in mm · Type 6116-xx06011x000xxxx without booster unit with Type 3766-000 Positioner*

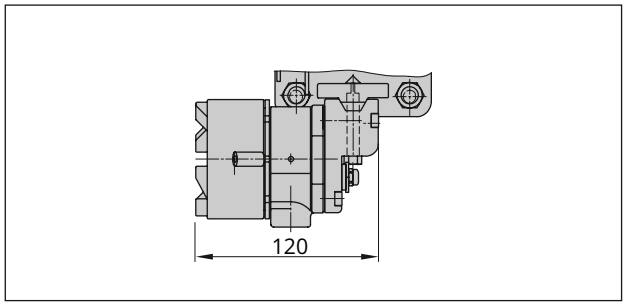


**Fig. 10:** *Dimensions in mm · Type 6116-xx06011x000xxxx without booster unit (attachment according to NAMUR with Type 4765/3760)*

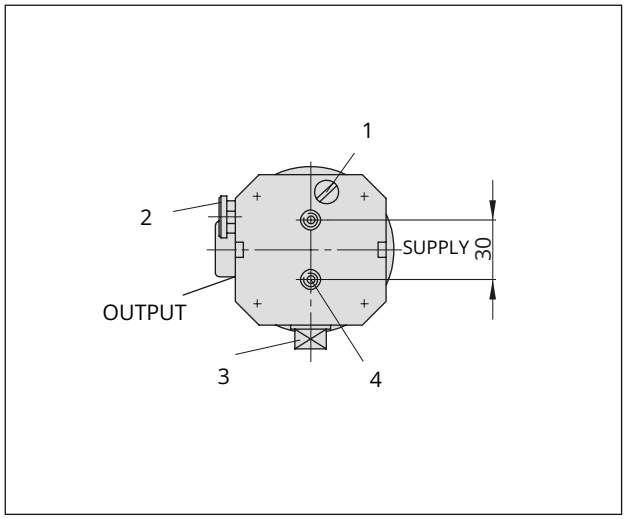


**Fig. 11:** *Dimensions in mm · Rear view of Type 6116 without mounting parts*

1 Restrictor
2 Exhaust (vent plug) IP54
3 Pressure gauge connection
4 M6, 10 deep

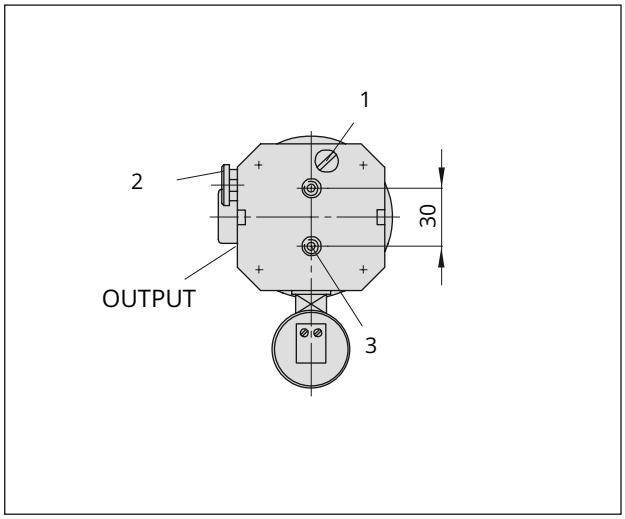


**Fig. 12:** *Dimensions in mm · Rear view of Type 6116 with booster unit*

1 Restrictor
2 Exhaust (vent plug) IP54
3 M6, 10 deep

# 4 Shipment and on-site transport

The work described in this chapter is to be performed only by personnel appropriately qualified to carry out such tasks.

## 4.1 Accepting the delivered goods

After receiving the shipment, proceed as follows:

1. Compare the shipment received with the delivery note.
2. Check the shipment for transportation damage. Report any damage to SAMSON and the forwarding agent (refer to delivery note).

## 4.2 Removing the packaging from the converter

**i *Note***

*Do not remove the packaging until immediately before mounting and start-up.*

1. Remove the packaging from the converter.
2. Check scope of delivery.
3. Dispose and recycle the packaging in accordance with the local regulations.

## 4.3 Transporting the converter

- Protect the converter against external influences (e.g. impact).
- Protect the converter against moisture and dirt.
- Observe the permissible ambient temperature range (see Chapter 3.2).

## 4.4 Lifting the converter

Due to the low service weight, lifting equipment is not required to lift the converter.

## 4.5 Storing the converter

**! *NOTICE***

***Risk of damage to the converter due to improper storage.***

⇨ *Observe the storage instructions.*

⇨ *Avoid longer storage periods.*

⇨ *Contact SAMSON in case of different storage conditions or longer storage times.*

**i *Note***

*SAMSON recommends to regularly check the converter and the prevailing storage conditions during long storage periods.*

**Storage instructions**

- Protect the converter against external influences (e.g. impact).
- Protect the converter against moisture and dirt.
- Store it at a relative humidity of less than 75 %. In damp spaces, prevent condensation. If necessary, use a drying agent or heating.
- Make sure that the ambient air is free of acids or other corrosive media.
- Observe the permissible ambient temperature range (see Chapter 3.2).
- Do not place any objects on the converter.

# 5 Installation

The work described in this chapter is to be performed only by personnel appropriately qualified to carry out such tasks.

**⚠ DANGER**

***Risk of fatal injury due to the ignition of an explosive atmosphere.***

*Incorrect installation, operation or maintenance of the converter in potentially explosive atmospheres may lead to ignition of the atmosphere and ultimately to death.*

⇨ *The following regulations apply to installation in hazardous areas: DIN EN 60079-14 (VDE 0165-1).*

⇨ *Installation, operation or maintenance of the i/p converter is to be performed only by personnel who has undergone special training or instructions and/or who is authorized to work on explosion-protected devices in hazardous areas.*

## 5.1 Installation conditions

⇨ Install the converter horizontally with the pressure gauge (or screw plug) facing upward.

⇨ For devices with IP54 rating, make sure the vent plug is installed facing downward to the floor.

### 5.1.1 Work position

The work position for the converter is the front view onto the operating controls on the converter seen from the position of operating personnel.

Operators must ensure that, after installation of the converter, the operating personnel can perform all necessary work safely and easily access the device from the work position.

### 5.1.2 Mounting position

⇨ Install the converter horizontally with the pressure gauge (or screw plug) facing upward.

⇨ For devices with IP54 rating, make sure the vent plug is installed facing downward to the floor.

## 5.2 Preparation for installation

Before installation, make sure that the following conditions are met:

– The converter is not damaged.
– The connections of the converter are clean.

Proceed as follows:

⇨ Lay out the necessary material and tools to have them ready during mounting (see Chapter 15.1 for accessories required).

⇨ Check any mounted pressure gauges to make sure they function properly.

## 5.3 Installing i/p converters

The i/p converter can be mounted to a wall, pipe or directly to a control valve (see Fig. 13). Certain mounting accessories are required depending on the type of mounting (see Chapter 15.1).

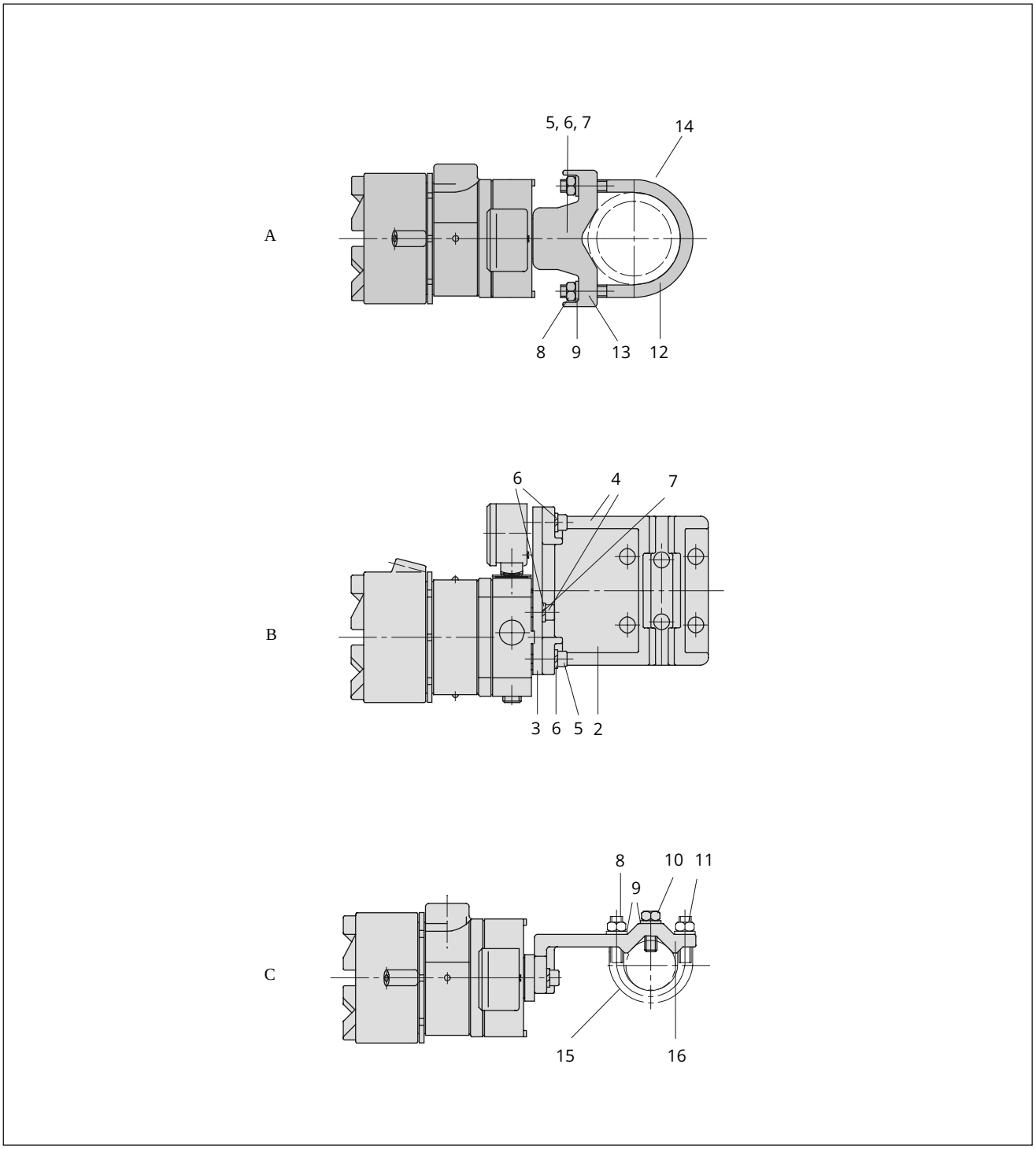


**Fig. 13:** *Mounting*

A Wall and pipe mounting · Top view
B Mounting on yoke/rod-type yoke · Side view
C Mounting on yoke/rod-type yoke · Top view
2 Plate
3 Rail
4 M6x16 screw
5 M6x25 screw
6 Spring washer B6
7 A6.4 washer

8 M8 nut
9 A8.4 washer
10 M8x25 screw
11 Clamp
13 Wall or pipe bracket
14 Clamp for attachment to 2" pipe
15 Mounting on rod-type yoke
16 Mounting on yoke

⇨ Mount the converter horizontally using the connecting piece (8, 9) onto the control valve or positioner. In this case, the cable entry must face sideways away from the control valve or positioner.

⇨ Make sure the O-ring (10) used to seal the enclosure is inserted correctly.

## 5.4 Mounting the i/p converter to positioners

Analog positioners with Ex d explosion protection can be implemented by combining a p/p positioner with a Type 6116-2 (Ex d) Converter. In the Type 6116 Converter version designed for positioner attachment, a booster is not used. Instead, the connection is used to connect the positioner. Another application involves upgrading p/p positioners to electropneumatic positioners (current signal input instead of the pneumatic signal).

– **Type 6116-xx010111000xxxx** with ½ NPT electrical connection
– **Type 6116-xx101012000xxxx** with M20x1.5 electrical connection

⇨ See Chapter 15.1 for accessories to combine with a positioner

## 5.5 Electrical connection

**⚠ WARNING**

***Incorrect connection at the terminals will render the explosion protection unsafe.***

⇨ *Observe the specifications in the explosion-protection certification.*

⇨ *Do not undo the enameled screws in or on the enclosure.*

**❗ NOTICE**

***Compliance with the specified degree of protection not achieved due to insufficient sealing of the terminal compartment.***

*Leakage to the terminal space may impair the degree of protection.*

⇨ *Make sure that the cable entries are sealed and the cover is locked in position during operation.*

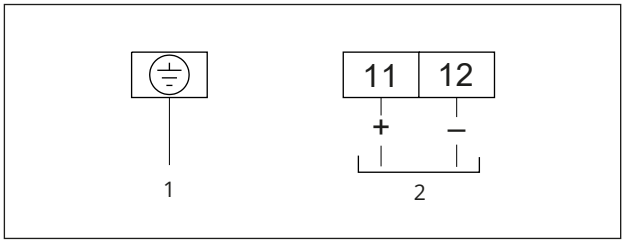


**Fig. 14:** *Electrical connection · Type 6116*

1 Grounding conductor (PE)
2 4 to 20 mA input

⇨ Observe the relevant electrotechnical regulations and the accident prevention regulations that apply in the country of use. In Germany, these are the VDE regulations and the accident prevention regulations of the employers' liability insurance.

**Additional instructions for the electrical connection in hazardous areas**

⇨ For installation in hazardous areas, observe the relevant standards that apply in the country of use. Standards applicable in Germany: DIN EN 60079-14 (VDE 0165-1):

Explosive Atmospheres – Electrical Installations Design, Selection and Erection. The maximum permissible values specified in the EC-type examination certificates apply when interconnecting intrinsically safe electrical equipment ($U_i$ or $U_0$, $I_i$ or $I_0$, $P_i$ or $P_0$, $C_i$ or $C_0$ and $L_i$ or $L_0$).

**Connection**

1. Unscrew the enclosure cover.
2. Connect the wires for the input signal to the terminals 11 (+) and 12 (–) using suitable cable glands or connectors.

   **i** ***Note***

   *An additional supply voltage is not required.*

   **Ex d version:**

   Connect the device with an approved metal cable entry (certificate of conformity) or a seal box pipe. Fit approved versions (certificate of conformity) with permanently sealed cable entries.
3. Connect the PE grounding conductor to the ground terminal located either inside or outside the enclosure.
4. Check the O-ring for damage.
5. Screw on the cover as far as it will go. Unscrew the cover until the first possible safety position (notch) is reached.
6. To lock the cover in position, tighten the cap screw.

## 5.6 Pneumatic connection

**i/p converter installed**

The supply air must meet the following requirements:

– Min. +0.4 bar above the upper signal pressure range value
– Max. 10 bar
  Type 6116-2: max. 6 bar (see EC type examination certificate in Chapter 14)
– Dry, free of oil and dust (see Chapter 3.2)

The pneumatic connections for supply air (SUPPLY 8) and output (OUTPUT 36) are designed as threaded ports with G ¼ or ¼-18 NPT thread.

Customary fittings for metal tubing or plastic hoses can be used.

⇨ Read the maintenance instructions for upstream air reducing stations.

⇨ Blow through and clean all air pipes and hoses thoroughly before connecting them.

**! *NOTICE***

***Risk of property damage due to water entering the device.***

⇨ *Make sure that no water can enter at the end of an extension of the venting pipe (minimum cross-section of 28 mm² = 6 mm inside diameter) connected to either the vent elbow piece or directly to the G or NPT connection.*

**i/p converter mounted on the positioner**

Generally, the pneumatic connection of the i/p converter is established by connecting it to the pneumatic input of the positioner.

**Type 3766-000 Positioner**

For direct attachment to the Type 3766-000 Positioner (see Fig. 15), the converter is connected using the hollow screw with grommet (6) and threaded bushing (5). The second screw (7) is used to vent the converter over the positioner housing. Before attaching the connecting piece (8) to the positioner, remove the M20 screw plug and the connecting nipple (input signal).

**Type 4765 and Type 3760 Positioners**

Type 4765 and Type 3760 Positioners (see Fig. 16 and Fig. 17): The ⅛ NPT threaded connection of the connecting piece (9) needs to be fitted with a suitable cable gland and must be connected to the input connection (input signal 27) of the positioner using a pipe or hose.

⇨ Keep the connection as short and small as possible, e.g. 6x1 mm cross-section.

The second bore (G ¼) serves as vent and needs to be equipped with the vent plug (11) included in the accessories.

**All positioners**

⇨ Remove the connecting plate (1) with sealing element (1.1) from the bottom of the housing and replace it with the connecting plate included in the accessories (see Chapter 3.2).

⇨ Make sure that the sealing element is correctly inserted in the connecting plate.
The filter must be located in front of the restrictor of the connecting plate.

⇨ **Type 4765 and Type 3766:**

Plug on silicone hose (4, see Fig. 15 and Fig. 16).

⇨ **Type 3760:**

Place on cap (4, see Fig. 17).

⇨ For SUPPLY 8 and OUTPUT 36 of the positioner, see associated positioner documentation.

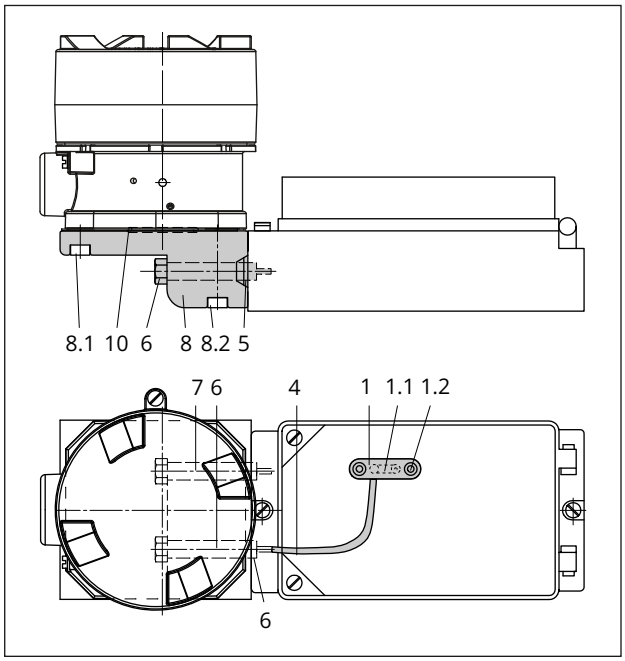


**Fig. 15:** *Direct attachment to Type 3766 Positioner*

1 Connecting plate
1.1 Sealing element
1.2 M3x16 screws
4 Hose
5 Threaded bushing
6 Hollow screw with grommet
7 Screw
8 Connecting piece
8.1 M4x12 screw
8.2 M4x40 screw
10 O-ring

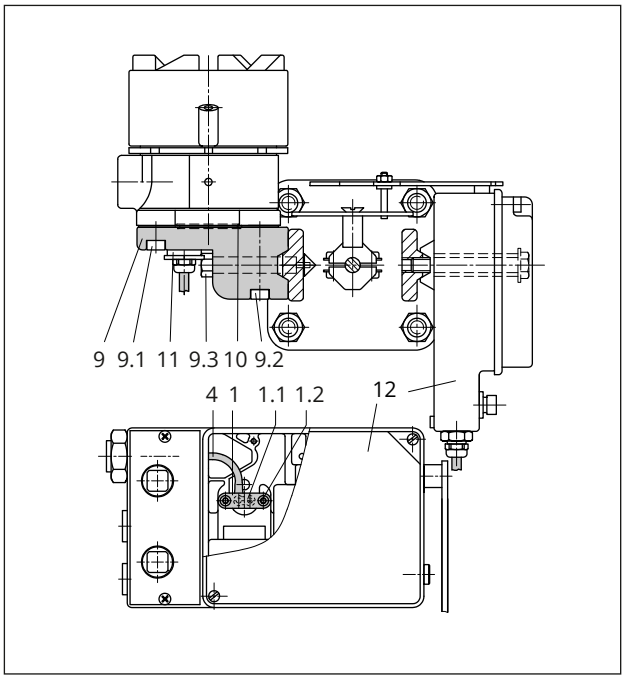


**Fig. 16:** *NAMUR attachment to valve with Type 4765 Positioner*

1 Connecting plate
1.1 Sealing element
1.2 M3x16 screws
4 Hose
9 Connecting piece
9.1 M4x12 screw
9.2 M4x40 screw
9. M4x55 screw
10 O-ring
11 Vent plugs
12 Positioner

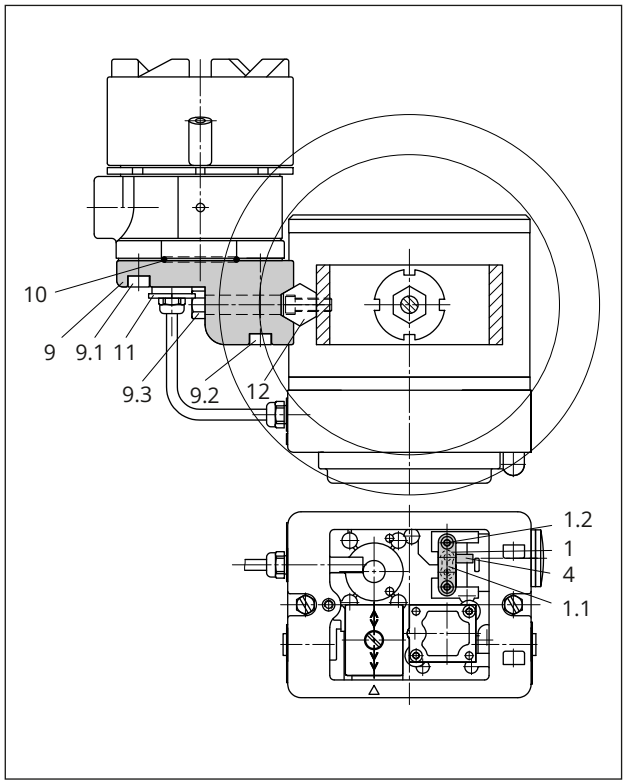


**Fig. 17:** *Attachment to micro-flow valve with Type 3760 Positioner · Positioner open*

1 Connecting plate
1.1 Sealing element
1.2 M3x16 screw
4 Cap
9 Connecting piece
9.1 M4x12 screw
9.2 M4x40 screw
9.3 M4x55 screw
10 O-ring
11 Vent plugs
12 Hex bar (not required for mounting to a NAMUR rib)

# 6 Start-up

**⚠ DANGER**

***Risk of fatal injury due to the ignition of an explosive atmosphere.***

*Incorrect installation, operation or maintenance of the converter in potentially explosive atmospheres may lead to ignition of the atmosphere and ultimately to death.*

⇨ *The following regulations apply to installation in hazardous areas: DIN EN 60079-14 (VDE 0165-1).*

⇨ *Installation, operation or maintenance of the i/p converter is to be performed only by personnel who has undergone special training or instructions and/or who is authorized to work on explosion-protected devices in hazardous areas.*

**⚠ DANGER**

***Loss of Ex d protection due to opening the enclosure cover or damage to the cover's thread and/or the connecting thread.***

⇨ *The enclosure cover must be firmly closed during operation.*

⇨ *Put the i/p converter out of operation when its cover thread or connecting thread is damaged. Replace it with a new device.*

Any adjustments to assign the travel of the control valve to the electric input signal must be made at the positioner separately from the converter module (see associated positioner documentation).

**i *Note***

*The versions with a 0 to 20 mA input signal do not have any switch-off electronics nor a potentiometer to adjust zero.*
*If the device does not have a zero potentiometer, the zero point can only be adjusted mechanically at the zero point adjuster (1.1, Fig. 18). See Chapter 6.2. Some versions also do not have a potentiometer to adjust the span.*

## 6.1 Checking zero and span

The device converts the input signal proportionally into the output signal.

The signal ranges are specified on the nameplate (see Chapter 2).

In case of a mounting position that is not horizontal or when the pressure gauge/screw plug does not face upwards, zero and span can be corrected by approx. 10 % using the electronics.

If the device does not work properly for any reason, check the zero and span.

The **ZERO** and **SPAN** potentiometers are accessible after opening the enclosure cover (see Fig. 18).

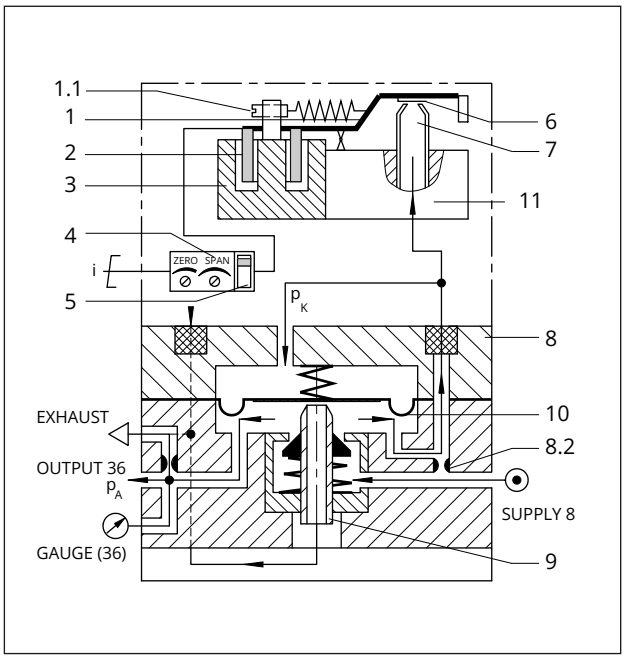


**Fig. 18:** *Functional diagram*

1 Balance beam
1.1 Zero point adjuster (Type 6112; only in version without electronics)
2 Plunger coil
3 Permanent magnet
4 Zero and span potentiometers (only in version with electronics)
5 Slide switch for switch-off electronics (only in version with electronics)
6 Flapper plate
7 Nozzle
8 Volume booster
8.2 Fixed restriction
9 Sleeve
10 Diaphragm
$p_A$ Output pressure
$p_K$ Backpressure (cascade pressure)
11 Type 6109/6112 i/p Module
⊙ Supply air

### 6.1.1 Checking zero

1. Unscrew the enclosure cover.
2. Connect a pressure gauge (minimum accuracy class 1) to the converter output.
3. Set the supply air to 0.4 bar above the upper output signal range value and apply it to the device (SUPPLY).
4. Deactivate the switch-off electronics at the slide switch (5).
5. Set the input signal to the lower range value of the input span using a suitable ammeter.
   Example:
   Set it to 4 mA for 4 to 20 mA range = 0.2 to 1 bar. The output signal of the pressure gauge should now indicate 0.2 bar.
6. If this is not the case, readjust the zero accordingly with the **ZERO** potentiometer.

### 6.1.2 Checking span

1. First check zero, if necessary (see Chapter 6.1.1).
2. Set the input signal to 20 mA (upper range value) using a suitable ammeter.
   **Example:**
   The output signal at the pressure gauge should now indicate 1.0 bar for a 4 to 20 mA range = 0.2 to 1.0 bar.

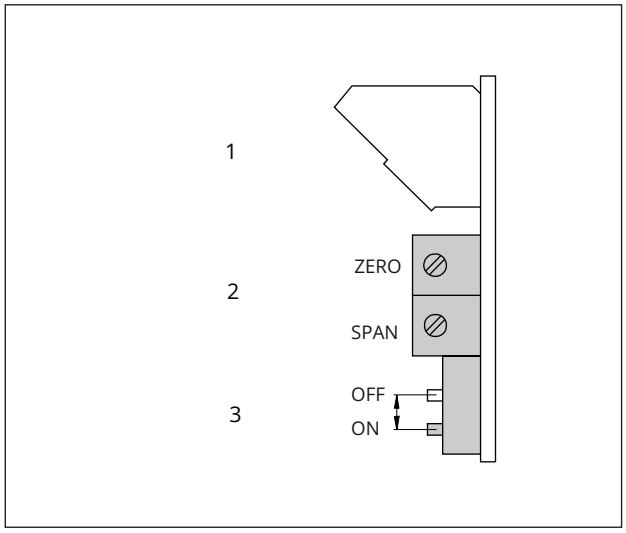


**Fig. 19:** *Zero and span correction*

1 Terminal
2 Potentiometer (zero and span)
3 Switch (switch-off electronics)

3. If this value is not correct, readjust the span accordingly with the **SPAN** potentiometer.
4. As the adjustment of zero and span influence each other, recheck both values and correct them, if necessary.

## 6.2 Zero adjustment (versions with 0 to 20 mA input signal)

If the device does not have a zero potentiometer, the zero point can only be adjusted mechanically at the zero point adjuster (1.1, Fig. 18).

⇨ Remove the front cover.

⇨ Insert a screwdriver through the hole in the cover of the Type 6112 i/p Module.

⇨ See Fig. 18.

# 7 Operation

The electropneumatic converter starts to operate once start-up is completed. No further action is necessary if the input signal is converted into the output signal according to specification. If this is not the case, the quality of the output signal can be improved by retuning zero and span (see Chapter 6).

# 8 Malfunctions

**Read hazard statements, warnings and caution notes in Chapter 1.**

## 8.1 Troubleshooting

⇨ See Table 2.

**Table 2:** *Troubleshooting*

| Malfunction | Possible reasons | Recommended action | Comments |
|---|---|---|---|
| No output signal despite changing the input signal | Supply air missing or not connected | ⇨ Check the supply air (see Chapter 5.6). | |
| | Incorrect terminal assignment | ⇨ Connect + and – terminals correctly (see Chapter 5.5). | **NOTICE**<br>The i/p converters do not need any extra voltage.<br>⇨ Do not connect a voltage supply. |
| | Incorrect input signal | ⇨ Connect correct signal. | ⇨ See the nameplate (Chapter 2) |
| | Restrictor clogged up | ⇨ Clean the restrictor (see Chapter 9.1). | |
| Output signal does not change proportionally into the input signal. | Poor air quality | ⇨ Contact SAMSON's After-sales Service. | Make sure that the air quality complies with the requirements (see Chapter 3.2). Check the air filter and separator installed in the upstream air reducing station regularly. |
| | Mechanics jammed (e.g. due to mechanical shock) | ⇨ Contact SAMSON's After-sales Service. | |
| | Sintered filter in SUPPLY and OUTPUT connection clogged up with dirt | ⇨ Clean or exchange sintered filter. | |
| i/p converter constantly vents off air loudly | Connections for supply air and output at the i/p converter inadvertently reversed | ⇨ Check pneumatic connections (see Chapter 5.6 and 9.1). | |
| i/p converter does not reach 100 % output e.g. 20 mA input: output only 70 % instead of 100 % | Supply pressure too low | Supply air must be 0.4 bar higher than the max. output signal (supply air = 0.4 bar) | |
| | Input signal faulty | ⇨ Check whether the input signal at the terminals reaches 100 % (100 % is e.g. 20 mA in standard version and 12 mA for split-range operation) | **NOTICE**<br>The i/p converters have a load impedance of max. 6 V (standard version) or max. 7 V (Ex ia version). Check specification concerning permissible load impedance at the source of the input signal. |
| | Consumption of air capacity too high | ⇨ Adapt consumption of the air capacity according to the technical data (see Chapter 3.2). | |

**i** ***Note***

*Contact SAMSON's After-sales Service for malfunctions not listed in the table.*

## 8.2 Emergency action

Plant operators are responsible for emergency action to be taken in the plant.

# 9 Servicing

The work described in this chapter is to be performed only by personnel appropriately qualified to carry out such tasks.

Depending on the operating conditions, check the valve at certain intervals to prevent a possible failure before it can occur. Plant operators are responsible for drawing up an inspection and test plan.

**Tip**

*Our after-sales service can support you in drawing up an inspection and test plan for your plant.*

**DANGER**

***Risk of fatal injury due to the ignition of an explosive atmosphere.***

*Incorrect installation, operation or maintenance of the converter in potentially explosive atmospheres may lead to ignition of the atmosphere and ultimately to death.*

⇨ *The following regulations apply to installation in hazardous areas: DIN EN 60079-14 (VDE 0165-1).*

⇨ *Installation, operation or maintenance of the i/p converter is to be performed only by personnel who has undergone special training or instructions and/or who is authorized to work on explosion-protected devices in hazardous areas.*

The converter requires no maintenance.

⇨ See Chapter 8 for troubleshooting.

## 9.1 Cleaning the restrictor

The restrictor (see Fig. 20) is located inside the enclosure. It can be accessed from the back of the device.

1. Unscrew the screw plug (Ø10).
2. Remove the restrictor.
3. To remove blockages, take the filter out of the restrictor and clean or replace it.

⇨ See Chapter 15.1 for spare parts.

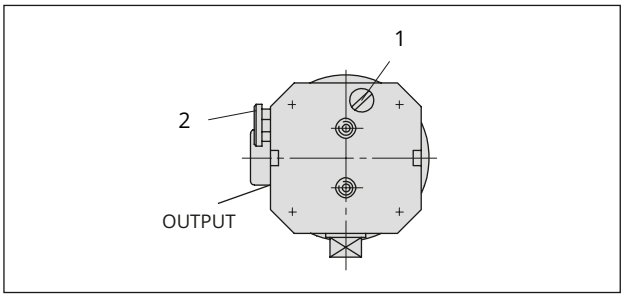


**Fig. 20:** *Restrictor at the back*

1 Restrictor
2 Exhaust (vent plug) IP54

## 9.2 Cleaning pneumatic connections

⇨ Unscrew plastic-rimmed filters. Clean or renew them (see Chapter 15.1).

# 10 Decommissioning

The work described in this chapter is to be performed only by personnel appropriately qualified to carry out such tasks.

**⚠ DANGER**

***Risk of fatal injury due to the ignition of an explosive atmosphere.***

*Incorrect installation, operation or maintenance of the converter in potentially explosive atmospheres may lead to ignition of the atmosphere and ultimately to death.*

⇨ *The following regulations apply to installation in hazardous areas: DIN EN 60079-14 (VDE 0165-1).*

⇨ *Installation, operation or maintenance of the i/p converter is to be performed only by personnel who has undergone special training or instructions and/or who is authorized to work on explosion-protected devices in hazardous areas.*

⇨ Disconnect the supply voltage and depressurize the supply air line.

# 11 Removal

The work described in this chapter is to be performed only by personnel appropriately qualified to carry out such tasks.

1. Check to ensure that the supply voltage is disconnected and the supply air line is depressurized.
2. Remove the pneumatic and electrical connections.
3. Remove the converter from the wall, pipe or control valve (depending on how it is mounted).

# 12 Repairs

If the converter does not function properly according to how it was originally sized or does not function at all, it is defective and must be repaired or exchanged.

**NOTICE**

***Risk of converter damage due to incorrect service or repair work.***

⇨ *Do not perform any repair work on your own.*

⇨ *Contact SAMSON's After-sales Service.*

## 12.1 Servicing explosion-protected devices

If a part of the device on which the explosion protection is based needs to be serviced, the device must not be put back into operation until a qualified inspector has assessed it according to the requirements, has issued an inspection certificate or given the device a mark of conformity.

Inspection by a qualified inspector is not required if SAMSON performs a routine test on the device before putting it back into operation. Document the passing of the routine test by attaching a mark of conformity to the device.

Replace explosion-protected components only with original, routine-tested components by the manufacturer.

Devices that have already been used outside hazardous areas and are intended for future use inside hazardous areas must comply with the safety requirements placed on serviced devices. Before being operated inside hazardous areas, test the devices according to the specifications for servicing explosion-protected devices.

## 12.2 Returning the converter to SAMSON

Defective converters can be returned to SAMSON for examination. Proceed as follows to return converters:

1. Remove the converter (see Chapter 11).
2. Continue as described on our website at ▶ www.samsongroup.com > Service > After-sales Service > Returning goods.

# 13 Disposal



SAMSON is a producer registered in Europe, agency in charge
▶ www.samsongroup.com > About SAMSON > Environment, Social & Governance > Material Compliance > Waste electrical and electronic equipment (WEEE)
WEEE reg. no.: DE 62194439

Information on substances listed as substances of very high concern (SVHC) on the candidate list of the REACH regulation can be found in the document “Additional Information on Your Inquiry/Order”, which is added to the order documents, if applicable. This document includes the SCIP number assigned to the devices concerned. This number can be entered into the database on the European Chemicals Agency (ECHA) website (▶ https://www.echa.europa.eu/scip-database) to find out more information on the SVHC contained in the device.

**Note**

*SAMSON can provide you with a recycling passport on request. Simply e-mail us at aftersalesservice@samsongroup.com giving details of your company address.*

**Tip**

*On request, SAMSON can appoint a service provider to dismantle and recycle the product as part of a distributor take-back scheme.*

⇨ Observe local, national and international refuse regulations.

⇨ Do not dispose of components, lubricants and hazardous substances together with your other household waste.

# 14 Certificates

The following certificates are included on the next pages:

- EU declaration of conformity
- EU type examination certificate
- EAC declaration of conformity for the Eurasian Economic Union (EAEU)

The certificates shown were up to date at the time of publishing. The latest certificates can be found on our website:

▶ www.samsongroup.com > Products > Signal converters > 6116

SMART IN FLOW CONTROL.

SAMSON

# EU Konformitätserklärung / EU Declaration of Conformity / Déclaration UE de conformité

Die alleinige Verantwortung für die Ausstellung dieser Konformitätserklärung trägt der Hersteller/
This declaration of conformity is issued under the sole responsibility of the manufacturer/
La présente déclaration de conformité est établie sous la seule responsabilité du fabricant.

Für das folgende Produkt / For the following product / Nous certifions que le produit

**i/p-Umformer / i/p-Converter / Convertisseur i/p**
**Typ / Type / Type 6116**

wird die Konformität mit den einschlägigen Harmonisierungsrechtsvorschriften der Union bestätigt /
the conformity with the relevant Union harmonisation legislation is declared with/
est conforme à la législation d'harmonisation de l'Union applicable selon les normes:

| | |
|---|---|
| EMC 2014/30/EU | EN 61000-6-2:2005, EN 61000-6-3:2007 +A1:2011, EN 61326-1:2013 |
| RoHS 2011/65/EU | EN 50581:2012 |

Hersteller / Manufacturer / Fabricant:

SAMSON AKTIENGESELLSCHAFT
Weismüllerstraße 3
D-60314 Frankfurt am Main
Deutschland/Germany/Allemagne

Frankfurt / Francfort, 2017-07-29

Im Namen des Herstellers/ On behalf of the Manufacturer/ Au nom du fabricant.

i v. H. Zager

Hanno Zager
Leiter Qualitätssicherung/Head of Quality Managment/
Responsable de l'assurance de la qualité

i.V. Dirk Hoffmann

Dirk Hoffmann
Zentralabteilungsleiter/Head of Department/Chef du département
Entwicklungsorganisation/Development Organization

ce_6116-0_de_en_fra_rev07.pdf

SMART IN FLOW CONTROL.

SAMSON

# EU Konformitätserklärung / EU Declaration of Conformity / Déclaration UE de conformité

Die alleinige Verantwortung für die Ausstellung dieser Konformitätserklärung trägt der Hersteller/
This declaration of conformity is issued under the sole responsibility of the manufacturer/
La présente déclaration de conformité est établie sous la seule responsabilité du fabricant.

Für das folgende Produkt / For the following product / Nous certifions que le produit

**i/p-Umformer / i/p-Converter / Convertisseur i/p**
**Typ / Type / Type 6116-1...**

entsprechend der EU-Baumusterprüfbescheingung PTB 02 ATEX 2199 ausgestellt von der/
according to the EU Type Examination PTB 02 ATEX 2199 issued by/
établi selon le certificat CE d'essais sur échantillons PTB 02 ATEX 2199 émis par:

Physikalisch Technische Bundesanstalt
Bundesallee 100
D-38116 Braunschweig
Benannte Stelle/Notified Body/Organisme notifié 0102

wird die Konformität mit den einschlägigen Harmonisierungsrechtsvorschriften der Union bestätigt /
the conformity with the relevant Union harmonisation legislation is declared with/
est conforme à la législation d'harmonisation de l'Union applicable selon les normes:

| | |
|---|---|
| EMC 2014/30/EU | EN 61000-6-2:2005, EN 61000-6-3:2007 +A1:2011, EN 61326-1:2013 |
| Explosion Protection 94/9/EC (bis/to 2016-04-19)<br>Explosion Protection 2014/34/EU (ab/from 2016-04-20) | EN 60079-0:2009, EN 60079-11:2012 |
| RoHS 2011/65/EU | EN 50581:2012 |

Hersteller / Manufacturer / Fabricant:

SAMSON AKTIENGESELLSCHAFT
Weismüllerstraße 3
D-60314 Frankfurt am Main
Deutschland/Germany/Allemagne

Frankfurt / Francfort, 2017-07-29

Im Namen des Herstellers/ On behalf of the Manufacturer/ Au nom du fabricant.

i v. H. Zager

Hanno Zager
Leiter Qualitätssicherung/Head of Quality Managment/
Responsable de l'assurance de la qualité

i.V. Dirk Hoffmann

Dirk Hoffmann
Zentralabteilungsleiter/Head of Department/Chef du département
Entwicklungsorganisation/Development Organization

ce_6116-1_de_en_fra_rev07.pdf

SMART IN FLOW CONTROL.

SAMSON

# EU Konformitätserklärung / EU Declaration of Conformity / Déclaration UE de conformité

Die alleinige Verantwortung für die Ausstellung dieser Konformitätserklärung trägt der Hersteller/
This declaration of conformity is issued under the sole responsibility of the manufacturer/
La présente déclaration de conformité est établie sous la seule responsabilité du fabricant.

Für das folgende Produkt / For the following product / Nous certifions que le produit

**i/p-Umformer / i/p-Converter / Convertisseur i/p**
**Typ / Type / Type 6116-2...**

entsprechend der EU-Baumusterprüfbescheingung BVS 14 ATEX E 104 X ausgestellt von der/
according to the EU Type Examination BVS 14 ATEX E 104 X issued by/
établi selon le certificat CE d'essais sur échantillons BVS 14 ATEX E104 X émis par:

DEKRA EXAM GmbH
Dinnendahlstraße 9
D-44809 Bochum
Benannte Stelle/Notified Body/Organisme notifié 0158

wird die Konformität mit den einschlägigen Harmonisierungsrechtsvorschriften der Union bestätigt /
the conformity with the relevant Union harmonisation legislation is declared with/
est conforme à la législation d'harmonisation de l'Union applicable selon les normes:

| | |
|---|---|
| EMC 2014/30/EU | EN 61000-6-2:2005, EN 61000-6-3:2007 +A1:2011, EN 61326-1:2013 |
| Explosion Protection 94/9/EC (bis/to 2016-04-19)<br>Explosion Protection 2014/34/EU (ab/from 2016-04-20) | EN 60079-0:2012, EN 60079-1:2007 |
| RoHS 2011/65/EU | EN 50581:2012 |

Hersteller / Manufacturer / Fabricant:

SAMSON AKTIENGESELLSCHAFT
Weismüllerstraße 3
D-60314 Frankfurt am Main
Deutschland/Germany/Allemagne

Frankfurt / Francfort, 2017-07-29

Im Namen des Herstellers/ On behalf of the Manufacturer/ Au nom du fabricant.

i v. H. Zager

Hanno Zager
Leiter Qualitätssicherung/Head of Quality Managment/
Responsable de l'assurance de la qualité

i.V. Dirk Hoffmann

Dirk Hoffmann
Zentralabteilungsleiter/Head of Department/Chef du département
Entwicklungsorganisation/Development Organization

ce_6116-2_de_en_fra_rev07.pdf

**Physikalisch-Technische Bundesanstalt**
**Braunschweig und Berlin**

# TRANSLATION

# (1) EC TYPE EXAMINATION CERTIFICATE

(2) Equipment and Protective Systems Intended for Use in Potentially Explosive Atmospheres – **Directive 94/9/EC**

(3) EC Type Examination Certificate Number

**PTB 02 ATEX 2199**

(4) Equipment: Model 6116-1. I/P Converter

(5) Manufacturer: SAMSON AG

(6) Address: Weismüllerstr. 3, 60314 Frankfurt, Germany

(7) This equipment and any acceptable variation thereof are specified in the schedule to this certificate.

(8) The Physikalisch-Technische Bundesanstalt, notified body number 0102 in according to Article 9 of the Council Directive 94/9/EC of 23 March 1994, certifies that this equipment has been found to comply with the Essential Health and Safety Requirement relating to the design and construction of equipment and protective systems intended for use in potentially explosive atmospheres given in Annex II to the Directive.

The examination and test results are recorded in confidential report: **PTB Ex 02-22374**

(9) The essential health and safety requirements are satisfied by compliance with

**EN 50014: 1997+A1+A2 EN 50020: 1994**

(10) If the sign "X" is placed after the certificate number, it indicates that the equipment is subject to special conditions for safe use specified in the schedule to this certificate.

(11) According to the Directive 94/9/EC, this EC TYPE EXAMINATION CERTFICATE relates only to the design and construction of the specified equipment. If applicable, further requirements of this Directive apply to the manufacture and supply of the equipment.

The results laid down in this test report refer exclusively to the test object and the technical documentation submitted. Test reports without signature and seal are invalid. This test report may be reproduced unaltered only. Extracts or amendments shall require the prior approval of the Physikalisch-Technische Bundesanstalt.

(12) The marking of the equipment shall include the following:

 **II 2G EEx ia IIC T6**

Zertifizierungsstelle Explosionsschutz Braunschweig, 07 March 2003
By order

(Signature) (Seal)

The results laid down in this test report refer exclusively to the test object and the technical documentation submitted. Test reports without signature and seal are invalid. This test report may be reproduced unaltered only. Extracts or amendments shall require the prior approval of the Physikalisch-Technische Bundesanstalt.

(13) # Schedule

(14) **EC TYPE EXAMINATION CERTIFICATE No. PTB 02 ATEX 2199**

(15) **Description of Equipment**

The Model 6116-1.. I/P Converter serves for converting a load-independent current into a standard pressure signal in the 0.2 to 1 or 0.4 to 2 bar range respectively. It consists of an i/p module and a downstream pneumatic amplifier.

The Model 6116-1.. I/P Converter is a passive two-terminal network which may be connected to any certified intrinsically safe circuit, provided the permissible maximum values of $U_i$, $I_i$ and $P_i$ are not exceeded.

For air supply non-combustible media are used.

The device is intended for use inside and outside of hazardous locations.

The correlation between equipment version, temperature classification, permissible ambient temperature ranges and maximum short-circuit currents is shown in the tale below:

**Version with I/P Module 6109-1..**

| Temperature class | Permissible ambient temperature range | Maximum short-circuit current |
|---|---|---|
| **T6** | -45 °C ... 60 °C | |
| **T5** | -45 °C ... 70 °C | 85 mA |
| **T4** | -45 °C ... 80 °C | |
| **T5** | -45 °C ... 70 °C | 100 mA |
| **T4** | -45 °C ... 80 °C | |

**Version with I/P Module 6112-2..**

| Temperature class | Permissible ambient temperature range | Maximum short-circuit current |
|---|---|---|
| **T6** | -45 °C ... 60 °C | 85 mA or |
| **T5** | -45 °C ... 70 °C | 100 mA or |
| **T4** | -45 °C ... 80 °C | 120 mA |

The results laid down in this test report refer exclusively to the test object and the technical documentation submitted. Test reports without signature and seal are invalid. This test report may be reproduced unaltered only. Extracts or amendments shall require the prior approval of the Physikalisch-Technische Bundesanstalt.

**Schedule to the EX Type Examination Certificate PTB 02 ATEX 2199**

**Electrical data**

**Version with I/P Module 6109-1.**

| | |
|---|---|
| Signal Circuit (terminals 11/12) | Type of protection. Intrinsic safety EEx ia IIC only for connection to a certified intrinsically safe circuit |

Maximum values:

$U_i$ = 28 V
$I_i$ = 85mA or 100 mA resp.
$P_i$ = 0,7 W

$C_i$ = negligible, $L_i$ = negligible

**Version with I/P Module 6112-2.**

| | |
|---|---|
| Signal circuit (terminals 11/12) | Type of protection. Intrinsic safety EEx ia IIC only for connection to a certified intrinsically safe circuit |

$U_i$ = 28 V
$I_i$ = 100 mA or 85 mA resp.
$P_i$ = 0,7 W

$C_i$ = negligible, $L_i$ = negligible

**or**

$U_i$ = 25 V
$I_i$ = 120 mA
$P_i$ = 0,7 W

$C_i$ = negligible, $L_i$ = negligible

(16) Test report: **PTB Ex-02-22374**

(17) **Special conditions for safe use**

None

The results laid down in this test report refer exclusively to the test object and the technical documentation submitted. Test reports without signature and seal are invalid. This test report may be reproduced unaltered only. Extracts or amendments shall require the prior approval of the Physikalisch-Technische Bundesanstalt.

(18) **Essential Health and Safety Requirements**

In compliance with the standards specified above

Zertifizierungsstelle Explosionsschutz
By order

Braunschweig, 7 March 2003

(Signature) (seal)

Dr. Ing. U. Johannsmeyer
Regierungsdirektor

The results laid down in this test report refer exclusively to the test object and the technical documentation submitted. Test reports without signature and seal are invalid. This test report may be reproduced unaltered only. Extracts or amendments shall require the prior approval of the Physikalisch-Technische Bundesanstalt.

# Physikalisch-Technische Bundesanstalt

**Braunschweig und Berlin**

## 1. S U P P L E M E N T

**according to Directive 94/9/EC Annex III.6**

## to EC-TYPE-EXAMINATION CERTIFICATE PTB 02 ATEX 2199

## (Translation)

Equipment: i/p-converter, type 6116-1..

Marking:  **II 2 G EEx ia IIC T6**

Manufacturer: SAMSON AG Mess- und Regeltechnik

Address: Weismüllerstr. 3, 60314 Frankfurt, Germany

Description of supplements and modifications

The i/p-converter of type 6116-1.. is used for the conversion of a load-independent current into a normalized pressure signal ranging from 0.2 to 1 bar or 0.4 to 2 bar respectively. It consists of an i/p-module and a downstream pneumatic amplifier.

The i/p-converter of type 6116-1.. is a passive two-terminal network that may be connected to all intrinsically safe circuits provided that the permissible maximum values for $U_i$, $I_i$ and $P_i$ are not exceeded.

Non-flammable media are used as pneumatic auxiliary power.

The equipment is intended for the application inside and outside of hazardous areas.

For relationship between variant, temperature class, permissible ambient temperature ranges and maximum short-circuit current, reference is made to the following tables:

**Variant with i/p-module 6109-1..**

| Temperature class | Permissible ambient temperature range | Maximum short-circuit current |
|---|---|---|
| T6 | -45 °C ... 60 °C | 85 mA |
| T5 | -45 °C ... 70 °C | |
| T4 | -45 °C ... 80 °C | |
| T5 | -45 °C ... 70 °C | 100 mA |
| T4 | -45 °C ... 80 °C | |



ZSEx10101e.dotm Stand 2013-02-13

EC-type-examination Certificates without signature and official stamp shall not be valid. The certificates may be circulated only without alteration. Extracts or alterations are subject to approval by the Physikalisch-Technische Bundesanstalt.
In case of dispute, the German text shall prevail.

Physikalisch-Technische Bundesanstalt • Bundesallee 100 • 38116 Braunschweig • GERMANY

## 1. SUPPLEMENT TO EC-TYPE-EXAMINATION CERTIFICATE PTB 02 ATEX 2199

**Variant with i/p-module 6112-2..**

| Temperature class | Permissible ambient temperature range | Maximum short-circuit current |
|---|---|---|
| T6 | -45 °C ... 60 °C | 85 mA bzw. |
| T5 | -45 °C ... 70 °C | 100 mA bzw. |
| T4 | -45 °C ... 80 °C | 120 mA |

Electrical data

**Variant with i/p-module 6109-1..**

Signal circuit ..... type of protection Intrinsic Safety Ex ia IIC
(terminals 11/12) only for connection to a certified intrinsically safe circuit

Maximum values:

$U_i$ = 28 V
$I_i$ = 85 mA or 100 mA
$P_i$ = 0.7 W

$C_i$ negligibly low
$L_i$ negligibly low

**Variant with i/p-module 6112-2..**

Signal circuit ..... type of protection Intrinsic Safety Ex ia IIC
(terminals 11/12) only for connection to a certified intrinsically safe circuit

Maximum values:

$U_i$ = 28 V
$I_i$ = 85 mA or 100 mA
$P_i$ = 0.7 W

$C_i$ negligibly low
$L_i$ negligibly low

or

$U_i$ = 25 V
$I_i$ = 120 mA
$P_i$ = 0.7 W

$C_i$ negligibly low
$L_i$ negligibly low

The future marking reads:

⟨Ex⟩ **II 2 G Ex ia IIC T6 Gb**



EC-type-examination Certificates without signature and official stamp shall not be valid. The certificates may be circulated only without alteration. Extracts or alterations are subject to approval by the Physikalisch-Technische Bundesanstalt.
In case of dispute, the German text shall prevail.

Physikalisch-Technische Bundesanstalt • Bundesallee 100 • 38116 Braunschweig • GERMANY

# Physikalisch-Technische Bundesanstalt

**Braunschweig und Berlin**

## 1. SUPPLEMENT TO EC-TYPE-EXAMINATION CERTIFICATE PTB 02 ATEX 2199

Applied standards

**EN 60079-0:2009** **EN 60079-11:2012**

Test report: PTB Ex 14-23187

Zertifizierungssektor Explosionsschutz
On behalf of PTB:

Braunschweig, March 3, 2014

Dr.-Ing. U. Johannsmeyer
Direktor und Professor



EC-type-examination Certificates without signature and official stamp shall not be valid. The certificates may be circulated only without alteration. Extracts or alterations are subject to approval by the Physikalisch-Technische Bundesanstalt.
In case of dispute, the German text shall prevail.

Physikalisch-Technische Bundesanstalt • Bundesallee 100 • 38116 Braunschweig • GERMANY

Translation

# (1) EC-Type Examination Certificate

(2) Equipment and protective systems intended for use in potentially explosive atmospheres - Directive 94/9/EC

(3) No. of EC-Type Examination Certificate: **BVS 14 ATEX E 104 X**

(4) Equipment: **i/p - Converter type 6116-2********

(5) Manufacturer: **SAMSON AG**

(6) Address: **Weismüllerstraße 3, 60314 Frankfurt am Main, Germany**

(7) The design and construction of this equipment and any acceptable variation thereto are specified in the appendix to this type examination certificate.

(8) The certification body of DEKRA EXAM GmbH, notified body no. 0158 in accordance with Article 9 of the Directive 94/9/EC of the European Parliament and the Council of 23 March 1994, certifies that this equipment has been found to comply with the Essential Health and Safety Requirements relating to the design and construction of equipment and protective systems intended for use in potentially explosive atmospheres, given in Annex II to the Directive. The examination and test results are recorded in the Test and Assessment Report BVS PP 14.2144 EG.

(9) The Essential Health and Safety Requirements are assured by compliance with:

**EN 60079-0:2012 General requirements**
**EN 60079-1:2007 Flameproof enclosure "d"**

(10) If the sign "X" is placed after the certificate number, it indicates that the equipment is subject to special conditions for safe use specified in the appendix to this certificate.

(11) This EC-Type Examination Certificate relates only to the design, examination and tests of the specified equipment in accordance to Directive 94/9/EC.
Further requirements of the Directive apply to the manufacturing process and supply of this equipment. These are not covered by this certificate.

(12) The marking of the equipment shall include the following:



**II 2G Ex d IIC T* Gb**

* see parameters for details

DEKRA EXAM GmbH
Bochum, dated 2014-06-27

Signed: Simanski
Certification body

Signed: Dr. Wittler
Special services unit


This certificate may only be reproduced in its entirety and without change.
DEKRA EXAM GmbH Dinnendahlstrasse 9 44809 Bochum Germany Phone +49.234.3696-105 Fax +49.234.3696-110 zs-exam@dekra.com

(13) Appendix to

(14) **EC-Type Examination Certificate**
**BVS 14 ATEX E 104 X**

(15) 15.1 Subject and type

i/p - Converter type 6116-2*[1)]**[2)]**[3)]*[4)]*[5)]*[6)]*[7)]*[8)]

[1)]: i/p-Module

[2)]: Input signal (electrical)

[3)]: Output (pneumatic)

[4)]: Operating direction

[5)]: Connection thread

[6)]: Pneumatic connection

[7)]: Ingress of protection

[8)]: Manometer

15.2 Description

The i/p-converter type 6116-2******** is designed to convert a current input signal in a pneumatic pressure output signal. The flameproof enclosure is made of an aluminium alloy; it is fitted with two stainless steel sintered flame arresters for comparative connection purposes.

The media is used for the pneumatic system are non-combustible gases and vapours. Gases enriched with oxygen shall not be used.

15.3 Parameters

Electric parameters

| | | |
|---|---|---|
| Nominal voltage | 1...10 | V |
| Nominal current | 4...20 | mA |
| Max. power dissipation | 1.5 | W |

Pneumatic parameters

| | | |
|---|---|---|
| $P_{max}$ Inlet | 6 | bar |
| $P_{max}$ Outlet | 5.6 | bar |

Thermal parameters

| | | |
|---|---|---|
| Ambient temperature / Temperature class | $-45\ °C \le T_a \le 50\ °C$ | T6 |
| | $-45\ °C \le T_a \le 65\ °C$ | T5 |
| | $-45\ °C \le T_a \le 80\ °C$ | T4 |

(16) Test and Assessment Report

BVS PP 14.2144 EG as of 2014-06-27

(17) Special conditions for safe use

For ambient temperatures of 80 °C, cable glands and connecting cables have to be used that are of a permitted service temperature of $T_a$ +3 K minimum. Nevertheless, those cable glands and connecting cables also need to be suitable for the lower temperatures.


This certificate may only be reproduced in its entirety and without change.
DEKRA EXAM GmbH Dinnendahlstrasse 9 44809 Bochum Germany Phone +49.234.3696-105 Fax +49.234.3696-110 zs-exam@dekra.com

We confirm the correctness of the translation from the German original.
In the case of arbitration only the German wording shall be valid and binding.

DEKRA EXAM GmbH
44809 Bochum, 2014-06-27
BVS-Sit/Mu A 20140043

Certification body

Special services unit


This certificate may only be reproduced in its entirety and without change.
DEKRA EXAM GmbH Dinnendahlstrasse 9 44809 Bochum Germany Phone +49.234.3696-105 Fax +49.234.3696-110 zs-exam@dekra.com

# ЕВРАЗИЙСКИЙ ЭКОНОМИЧЕСКИЙ СОЮЗ

# СЕРТИФИКАТ СООТВЕТСТВИЯ

№ ЕАЭС KZ.7500525.01.01.02380

Серия KZ № 0305501

**ОРГАН ПО СЕРТИФИКАЦИИ**

БИН 990940001103, ТОО "Т-СТАНДАРТ", аттестат аккредитации: KZ.O.02.0525, юридический адрес: Республика Казахстан, город Алматы, Бостандыкский район, проспект Аль-Фараби 19/1, ПФЦ «Нурлы-Тау», блок 3Б, 2 этаж, почтовый индекс: 050059, фактический адрес: Республика Казахстан, город Алматы, Бостандыкский район, проспект Аль-Фараби 19/1, ПФЦ «Нурлы-Тау», блок 3Б, 2 этаж, почтовый индекс: 050059, телефон: +7(701) 071 63 88, электронная почта: office@tst.kz

**ЗАЯВИТЕЛЬ**

БИН 130640006195, Товарищество с ограниченной ответственностью "НИЦ ГеоСервис". Место нахождения (адрес юридического лица) и адрес места осуществления деятельности: Республика Казахстан, Карагандинская область, город Караганда, район имени Казыбек Би, улица Терешковой, 18, индекс: M02E3T6. телефон: +7 (777) 540 50 96, электронная почта: cert_msk2@geomark.kz

**ИЗГОТОВИТЕЛЬ**

«SAMSON AKTIENGESELLSCHAFT», располагающийся по адресу: Германия, Weismüllerstraße 3, 60314 Frankfurt am Main; адрес осуществления деятельности: Германия, Weismüllerstraße 3, 60314 Frankfurt am Main; Kettelerstraße 99, 63075 Offenbach am Main

**ПРОДУКЦИЯ**

Электрическое оборудование: Электропневмопреобразователи, типов 6116-1, 6116-2 во взрывозащищенном исполнении, маркировка взрывозащиты и описание согласно приложению № 0159536-0159537; Продукция изготавливается в соответствии с Directive 2014/34/EU Equipment and protective systems intended for use in potentially explosive atmospheres; серийный выпуск

**КОД ТНВЭД ЕАЭС**

9032810000

**СООТВЕТСТВУЕТ ТРЕБОВАНИЯМ**

ТР ТС 012/2011 "О безопасности оборудования для работы во взрывоопасных средах" утвержденного решением Комиссии Таможенного союза от 18 октября 2011 г. № 825;

**СЕРТИФИКАТ ВЫДАН НА ОСНОВАНИИ**

протоколов испытаний № ИЛ-12/08-1, № ИЛ-12/08-5 от 08.12.2025г. выданных аккредитованной Испытательной лабораторией филиала "Атырау" Товарищества с ограниченной ответственностью "Т-Стандарт" (аттестат: KZ.T.06.2232); акта анализа состояния производства от 27.10.2025г. (эксперт-аудитор Жигалина Г.М.), выданного Органом по подтверждению соответствия Товарищества с ограниченной ответственностью "Т-Стандарт" (аттестат: KZ.O.02.0525); пояснительной записки; технической документации; Схема сертификации 1с;

**ДОПОЛНИТЕЛЬНАЯ ИНФОРМАЦИЯ**

Периодическую оценку сертифицируемой продукции проводит Орган по подтверждению соответствия Товарищества с ограниченной ответственностью "Т-Стандарт"; Действие сертификата распространяется на продукцию, изготовленную с 10.2025 г.; Условия хранения указаны в эксплуатационной документации. Срок службы – 15 лет; Договор № 01-02/10 от 07.08.2025г. ГОСТ 31610.0-2019 "Взрывоопасные среды. Часть 0. Оборудование. Общие требования"; ГОСТ 31610.11-2014 "Взрывоопасные среды. Часть 11. Оборудование с видом взрывозащиты "искробезопасная электрическая цепь "i"; ГОСТ IEC 60079-1-2013 "Взрывоопасные среды. Часть 1. Оборудование с видом взрывозащиты "взрывонепроницаемые оболочки "d"

**СРОК ДЕЙСТВИЯ С 28.01.2026 ПО 27.01.2031 ВКЛЮЧИТЕЛЬНО**

М.П.

Руководитель (уполномоченное лицо) органа по сертификации _____ (подпись) Овчинникова Вера Александровна (Ф.И.О.)

Эксперт (эксперт-аудитор) (эксперт/эксперты-аудиторы) _____ (подпись) Бекетай Абылайхан Азимханулы (Ф.И.О.)

Бланк изготовлен «КАОС», г. Астана

# ЕУРАЗИЯЛЫҚ ЭКОНОМИКАЛЫҚ ОДАҚ

# СӘЙКЕСТІК СЕРТИФИКАТЫ

EAC

№ ЕАЭС KZ.7500525.01.01.02380

Серия KZ № 0305501

**СЕРТИФИКАТТАУ ЖӨНІНДЕГІ ОРГАН**

БСН 990940001103, "Т-СТАНДАРТ" ЖШС, аттестат: KZ.O.02.0525, заңды мекенжайы: Қазақстан Республикасы, Алматы қаласы. Бостандық ауданы, Аль-Фараби даңғылы 19/1, ПФО «Нурлы-Тау», блок 3Б, 2 қабат, пошта индексі: 050059, нақты мекенжайы: Қазақстан Республикасы, Алматы қаласы, Бостандық ауданы, Аль-Фараби даңғылы 19/1, ПФО «Нурлы-Тау», блок 3Б, 2 қабат, пошта индексі: 050059, телефон: +7(701) 071 63 88, электрондық пошта: office@tst.kz

**ӨТІНІШ БЕРУШІ**

БСН 130640006195, "НИЦ ГеоСервис" жауапкершілігі шектеулі серіктестігі. Орналасқан жері (заңды тұлғаның мекенжайы) және қызметті жүзеге асыру орнының мекенжайы: Қазақстан Республикасы, Қарағанды облысы, Қарағанды қаласы, Қазыбек Би атындағы аудан, Терешкова көшесі, 18, индексі: M02E3T6. телефон: +7 (777) 540 50 96, электрондық пошта: cert_msk2@geomark.kz

**ӨНДІРУШІ**

«SAMSON AKTIENGESELLSCHAFT», мекен-жайы бойынша орналасқан: Германия, Weismüllerstraße 3, 60314 Frankfurt am Main қызметті жүзеге асыру орнының мекенжайы: Германия, Weismüllerstraße 3, 60314 Frankfurt am Main, Германия, Kettelerstraße 99, 63075 Offenbach am Main

**ӨНІМДЕР**

Электр жабдығы: 6116-1, 6116-2 типті электр пневматикалық түзгіштер, жарылыстан қорғалған орындауда, № 0159536-0159537 қосымшаға сәйкес жарылыстан қорғауды таңбалау және сипаттау; Өнім Directive 2014/34/EU Equipment and protective systems intended for use in potentially explosive atmospheres сәйкес дайындалған; сериялық шығарылым

**ЕАЭО СЭҚ ТН коды**

9032810000

**ТАЛАПТАРҒА СӘЙКЕС КЕЛЕДІ**

Кеден одағының техникалық регламенті Кеден одағының техникалық регламенті КО ТР 012/2011 "Жарылыс қаупі бар ортада жұмыс жасауға арналған жабдықтың қауіпсіздігі туралы" Кедендік одағы комиссиясының 2011 жылғы 18 қазандағы № 825 шешімімен бекітілген

**СЕРТИФИКАТ НЕГІЗІНДЕ БЕРІЛДІ**

2025ж.12.08 № ИЛ-12/08-1, № ИЛ-12/08-5 «Т-Стандарт» жауапкершілігі шектеулі серіктестігінің «Атырау» филиалының аккредиттелген сынақ зертханасы берген сынау хаттамалары (аттестат: KZ.T.06.2232); 2025ж.10.27 «Т-Стандарт» жауапкершілігі шектеулі серіктестігінің сәйкестікті растау жөніндегі органы берген (сарапшы-аудитор Жигалина Г.М.) өндірістің жай-күйін талдау актісі (аттестат: KZ.O.02.0525); түсіндірме жазбаны, пайдалану құжаттамасы; Сертификаттау схемасы: 1с

**ҚОСЫМША АҚПАРАТ**

Сертификатталатын өнімді мерзімді бағалауды "Т-Стандарт" жауапкершілігі шектеулі серіктестігінің сәйкестігін растау жөніндегі Орган жүргізеді; сертификаттың күші 2025ж.10 бастап дайындалған өнімге қолданылады; Сақтау шарттары пайдалану құжаттамасында көрсетілген. Қызмет ету мерзімі – 15 жыл; 2025ж.08.07 № 01-02/10 Шарт; МСТ 31610.0-2019 (IEC 60079-0:2017) "Жарылыс қаупі бар орта. 0-бөлім. Жабдық. Жалпы талаптар"; МСТ 31610.11-2014 (IEC 60079-11:2011) "Жарылыс қаупі бар орталар 11 бөлім. «Ұшқыннан қауіпсіз электр тізбегі «i» жарылыстан қорғау түрі бар жабдық"; МСТ IEC 60079-1-2013 "Жарылыс қаупі бар орталар. 1-бөлім. жарылыстан қорғау «"d" жарылыс өткізбейтін қабықшалар» түріндегі жабдық"

**ЖАРАМДЫЛЫҚ МЕРЗІМІ 28.01.2026 БАСТАП 27.01.2031 ДЕЙІН ҚОСА АЛҒАНДА**

Басшы (уәкілетті тұлға) сертификаттау жөніндегі орган _____ (қолы) Овчинникова Вера Александровна (Т.А.Ж.)

М.П.

Сарапшы (сарапшы-аудитор) (сарапшы / сарапшы-аудиторлар) _____ (қолы) Бекетай Абылайхан Азимханұлы (Т.А.Ж.)

Бланкті «ҚАОС» дайындады, Астана қ.

# ЕВРАЗИЙСКИЙ ЭКОНОМИЧЕСКИЙ СОЮЗ

# ПРИЛОЖЕНИЕ

Серия KZ № 0159536

К СЕРТИФИКАТУ СООТВЕТСТВИЯ № ЕАЭС KZ.7500525.01.01.02380

от 28.01.2026

Действителен до 27.01.2031



## 1. НАЗНАЧЕНИЕ И ОБЛАСТЬ ПРИМЕНЕНИЯ

Электропневмопреобразователи, типов 6116-1, 6116-2 во взрывозащищенном исполнении – далее преобразователи, предназначены для преобразования сигнала постоянного тока в пневматический сигнал. Преобразователь является промежуточным звеном для перехода от электрических измерительных устройств на пневматические регуляторы или от электрических регулирующих устройств на пневматические исполнительные механизмы.

Область применения – взрывоопасные зоны помещений и наружных установок класса 1 и 2 по ГОСТ 31610.10-1-2022 (IEC 60079-10-1:2020) «Взрывоопасные среды. Часть 10-1. Классификация зон. Взрывоопасные газовые среды», согласно ГОСТ IEC 60079-14-2013, регламентирующим применение электрооборудования во взрывоопасных средах.

## 2. ТЕХНИЧЕСКИЕ ХАРАКТЕРИСТИКИ

| **Наименование взрывозащищенного электрооборудования** | **Маркировка взрывозащиты** |
|---|---|
| Электропневмопреобразователи, типа 6116-1 | 1Ex ia IIC T6 Gb X |
| Электропневмопреобразователи, типа 6116-2 | 1Ex db IIC T6 Gb X |

2.1. Электропневмопреобразователи типа 6116-1

2.1.1. Степень защиты, обеспечиваемая оболочкой по ГОСТ 14254-2015, не ниже ..... IP54/IP65

2.1.2. Электропневмопреобразователи типа 6116-1 с электропневматическим модулем 6109-1

2.1.2.1. Допустимый диапазон температуры окружающей среды в зависимости от температурного класса и максимального тока короткого замыкания

| Температурный класс | Максимальный ток короткого замыкания 85 мА | Максимальный ток короткого замыкания 100 мА |
|---|---|---|
| T6 | от минус 45 °С до +60 °С | - |
| T5 | от минус 45 °С до +70 °С | от минус 45 °С до +70 °С |
| T4 | от минус 45 °С до +80 °С | от минус 45 °С до +80 °С |

2.1.2.2. Параметры искробезопасных цепей, контакты +11/-12

$U_i$, В ..... ≤ 28

$I_i$, мА ..... ≤ 85 или 100

$P_i$, мВт ..... ≤ 700

$C_i$, нФ ..... пренебрежимо мала

$L_i$, мкГн ..... пренебрежимо мала

2.1.3. Электропневмопреобразователи типа 6116-1 с электропневматическим модулем 6112-2

2.1.3.1. Допустимый диапазон температуры окружающей среды для температурного класса

| Температурный класс | Диапазон температуры | Максимальный ток короткого замыкания |
|---|---|---|
| T6 | от минус 45 °С до +60 °С | 85 мА или 100 мА или 120 мА |
| T5 | от минус 45 °С до +70 °С | |
| T4 | от минус 45 °С до +80 °С | |

2.1.3.2. Параметры искробезопасных цепей, контакты +11/-12

| Цепь | Максимальный ток короткого замыкания 85 мА или 100 мА | Максимальный ток короткого замыкания 120 мА |
|---|---|---|
| $U_i$, В | ≤ 28 | ≤ 25 |
| $I_i$, мА | ≤ 85 или 100 | ≤ 120 |
| $P_i$, мВт | ≤ 700 | ≤ 700 |
| $C_i$, нФ | пренебрежимо мала | пренебрежимо мала |
| $L_i$, мкГн | пренебрежимо мала | пренебрежимо мала |

2.2. Электропневмопреобразователи типа 6116-2

2.2.1. Степень защиты, обеспечиваемая оболочкой по ГОСТ 14254-2015, не ниже ..... IP54/IP65

2.2.2. Допустимый диапазон температуры окружающей среды для температурного класса

T6 ..... от минус 45 °С до +50 °С

T5 ..... от минус 45 °С до +65 °С

T4 ..... от минус 45 °С до +80 °С

2.2.3. Электрические характеристики

Напряжение питания, постоянного тока, В ..... от 1 до 10

Сила сигнального тока, мА ..... от 4 до 20

Максимальная рассеиваемая мощность, Вт ..... ≤ 1,5

Руководитель (уполномоченное лицо) органа по сертификации — (подпись) — Овчинникова Вера Александровна (Ф.И.О.)

М.П.

Эксперт (эксперт-аудитор) (эксперт/эксперты-аудиторы) — (подпись) — Бекетай Абылайхан Азимханулы (Ф.И.О.)

Бланк изготовлен «КАОС», г. Астана

# ЕУРАЗИЯЛЫҚ ЭКОНОМИКАЛЫҚ ОДАҚ

СӘЙКЕСТІК СЕРТИФИКАТЫНА Серия KZ № 0159536

# ҚОСЫМША № ЕАЭС KZ.7500525.01.01.02380

28.01.2026
дейін жарамды 27.01.2031
1 парақ

## 1. МАҚСАТЫ ЖӘНЕ ҚОЛДАНУ САЛАСЫ

Жарылыстан қорғалған орындаудағы 6116-1, 6116-2 типті электр пневматикалық түрлендіргіштер - бұдан әрі түрлендіргіштер тұрақты ток сигналын пневматикалық сигналға түрлендіруге арналған. Түрлендіргіш электрлік өлшеу құрылғыларынан пневматикалық реттегіштерге немесе электрлік реттегіш құрылғылардан пневматикалық атқарушы тетіктерге өту үшін аралық буын болып табылады.

Қолдану саласы - МСТ 31610.10-1-2022 (IEC 60079-10-1:2020) « Жарылыс қаупі бар орталар. 10-1 бөлім. Аймақтардың жіктелуі. Жарылыс қаупі бар шаң ортасы» бойынша 1 және 2 сыныпты жарылыс қаупі бар аймақтар, МСТ IEC 60079-14-2013 сәйкес жарылыс қаупі бар орталарда электр жабдықтарын қолдануды регламенттейтін.

## 2. ТЕХНИКАЛЫҚ СИПАТТАМАЛАРЫ

| Жарылыстан қорғалған электр жабдығының атауы | Жарылыстан қорғауды таңбалау |
|---|---|
| 6116-1 типті электр пневматикалық түзгіштер | 1Ex ia IIC T6 Gb X |
| 6116-2 типті электр пневматикалық түзгіштер | 1Ex db IIC T6 Gb X |

2.1. 6116-1 типті электр пневматикалық түзгіштер

2.1.1. МСТ 14254-2015 бойынша қабықшамен қамтамасыз етілетін қорғау дәрежесі төмен емес..... IP54/IP65

2.1.2. 6109-1 электрпневматикалық модулі бар 6116-1 типті электрпневт түзгіштер

2.1.2.1. Қысқа тұйықталудың температуралық сыныбы мен ең жоғары тогына байланысты қоршаған орта температурасының рұқсат етілген диапазоны

| Температура сыныбы | Қысқа тұйықталудың ең жоғары тогы 85 мА | Қысқа тұйықталудың ең жоғары тогы 100 мА |
|---|---|---|
| T6 | минус 45 °С бастап +60 °С дейін | - |
| T5 | минус 45 °С бастап +70 °С дейін | минус 45 °С бастап +70 °С дейін |
| T4 | минус 45 °С бастап +80 °С дейін | минус 45 °С бастап +80 °С дейін |

2.1.2.2. Ұшқын қауіпсіз тізбектердің параметрлері, байланыстар +11/-12

$U_i$, В ..... ≤ 28

$I_i$, мА ..... ≤ 85 немесе 100

$P_i$, мВт ..... ≤ 700

$C_i$, нФ ..... елемей-ақ кішкентай

$L_i$, мкГн ..... елемей-ақ кішкентай

2.1.3. 6112-2 электрпневматикалық модулі бар 6116-1 типті электрпневт түзгіштер

2.1.3.1. Температуралық сынып үшін қоршаған орта температурасының рұқсат етілген диапазоны

| Температура сыныбы | Температура диапазоны | Қысқа тұйықталудың ең жоғары тогы |
|---|---|---|
| T6 | минус 45 °С бастап +60 °С дейін | 85 мА немесе 100 мА немесе 120 мА |
| T5 | минус 45 °С бастап +70 °С дейін | |
| T4 | минус 45 °С бастап +80 °С дейін | |

2.1.3.2. Ұшқын қаупі жоқ тізбектердің параметрлері, байланыстар +11/-12

| Тізбек | Қысқа тұйықталудың ең жоғары тогы 85 мА немесе 100 мА | Қысқа тұйықталудың ең жоғары тогы 120 мА |
|---|---|---|
| $U_i$, В | ≤ 28 | ≤ 25 |
| $I_i$, мА | ≤ 85 немесе 100 | ≤ 120 |
| $P_i$, мВт | ≤ 700 | ≤ 700 |
| $C_i$, нФ | елемей-ақ кішкентай | елемей-ақ кішкентай |
| $L_i$, мкГн | елемей-ақ кішкентай | елемей-ақ кішкентай |

2.2. 6116-2 типті электр пневматикалық түзгіштер

2.2.1. МСТ 14254-2015 бойынша қабықшамен қамтамасыз етілетін қорғау дәрежесі төмен емес..... IP54/IP65

2.2.2. Температура сыныбы үшін қоршаған орта температурасының рұқсат етілген диапазоны

T6 ..... минус 45 °С бастап +50 °С дейін

T5 ..... минус 45 °С бастап +65 °С дейін

T4 ..... минус 45 °С бастап +80 °С дейін

2.2.3. Электр сипаттамалары

Қоректендіру кернеуі, тұрақты ток, В ..... 1-ден 10-ға дейін

Сигнал тогының күші, мА ..... 4-тен 20-ға дейін

Ең жоғары таратылатын қуат, Вт ..... ≤ 1,5

М.П.

Руководитель (уполномоченное лицо) органа по сертификации — (подпись) — Овчинникова Вера Александровна (Ф.И.О.)

Эксперт (эксперт-аудитор) (эксперт/эксперты-аудиторы) — (подпись) — Бекетай Абылайхан Азимханұлы (Ф.И.О.)

Бланкті «ҚАОС» дайындады, Астана қ.

# ПРИЛОЖЕНИЕ

Серия KZ № 0159537

К СЕРТИФИКАТУ СООТВЕТСТВИЯ № ЕАЭС KZ.7500525.01.01.02380

от 28.01.2026

Действителен до 27.01.2031



## 3. ОПИСАНИЕ КОНСТРУКЦИИ И СРЕДСТВ ОБЕСПЕЧЕНИЯ ВЗРЫВОЗАЩИТЫ

Электропневмопреобразователи выполнены в корпусе с крышкой, изготовленном из алюминиевого сплава с содержанием магния, цинка и циркония менее 7,5 %. Электропневмопреобразователи состоят из преобразовательного электропневматического модуля (i/p-модуля) типа 6109-1 или 6112-2, работающего по принципу компенсации сил, и включенного после него пневматического усилителя.

Управляющий постоянный ток протекает через подвижную катушку, расположенную в поле постоянного магнита. Действующее на коромысло усилие от подвижной катушки, пропорциональное величине тока, уравновешивается силой динамического давления, создаваемого потоком воздуха, поступающего из сопла на заслонку.

Давление воздуха в сопле и на выходе равно. При входном сигнале 0 мА выходное давление устанавливается на уровне 100 мбар регулировкой пружины.

Давление питания поступает в нижнюю камеру и обеспечивает определенный поток воздуха на выходе. Если входной ток возрастает, катушка притягивает заслонку к соплу. Вследствие этого возрастает давление на мембрану и коническую втулку. В нижней камере будет также возрастать давление. Это давление будет возрастать до тех пор, пока на мембране установится равновесие действующих сил. Если ток через катушку уменьшится, снизится усилие на коромысло, заслонка отойдет от сопла и уменьшится давление в сопле. Мембрана поднимется вверх, освободит коническую втулку, и откроется сброс воздуха, пока силы на мембране снова уравновесятся.

Взрывозащищенность преобразователей обеспечивается выполнением требований стандартов: ГОСТ 31610.0-2019 (IEC 60079-0:2017), ГОСТ IEC 60079-1-2013, ГОСТ 31610.11-2014 (IEC 60079-11:2011).

## 4. СПЕЦИАЛЬНЫЕ УСЛОВИЯ ПРИМЕНЕНИЯ

Знак «X», стоящий после Ex-маркировки, означает, что при эксплуатации необходимо соблюдать следующие специальные условия применения:

- монтаж, эксплуатацию, техническое обслуживание электропневмопреобразователей проводить в соответствии с указаниями производителя по его технической документации;
- соединение электропневмопреобразователей исполнения «Ex ia» с аппаратурой, расположенной вне взрывоопасной зоны, должно осуществляется через барьеры искрозащиты, имеющие сертификат соответствия для подключения устройств, находящихся во взрывоопасных зонах помещений и наружных установок, где возможно образование взрывоопасной газовой смеси категории IIC; входные и выходные искробезопасные параметры электропневмопреобразователей с учетом параметров соединительного кабеля должны соответствовать электрическим параметрам, указанным на барьере безопасности;
- запрещается эксплуатировать электропневмопреобразователи в условиях, превышающих предельные значения, указанные в документации изготовителя, техпаспорте и на заводской табличке;
- запрещается эксплуатация электропневмопреобразователей с механическими повреждениями;
- электропневмопреобразователи исполнения «Ex db» должны эксплуатироваться с сертифицированными кабельными вводами и заглушками, которые обеспечивают необходимый вид и уровень взрывозащиты и степень защиты оболочки;
- запрещается использовать кабельные вводы и заглушки общепромышленного исполнения;
- неиспользуемые отверстия под кабельные вводы необходимо закрывать заглушками;
- взрывонепроницаемые соединения не предназначены для ремонта;
- температурный класс/максимальная температура поверхности электропневмопреобразователей устанавливается в зависимости от температуры окружающей среды/температуры рабочей среды (процесса);
- при эксплуатации электропневмопреобразователей типа 6116-2 при температуре 80 °C должны использоваться соединительные кабели по формуле $T_a$ + 3 °C, а также предусмотренные для эксплуатации при низких температурах окружающей среды.

Специальные условия применения, обозначенные «X», должны быть отражены в сопроводительной документации.

М.П.

Руководитель (уполномоченное лицо) органа по сертификации — (подпись) — Овчинникова Вера Александровна (Ф.И.О.)

Эксперт (эксперт-аудитор) (эксперт/эксперты-аудиторы) — (подпись) — Бекетай Абылайхан Азимханұлы (Ф.И.О.)

Бланк изготовлен «КАОС», г. Астана

СӘЙКЕСТІК СЕРТИФИКАТЫНА Серия KZ № 0159537

EAC

# ҚОСЫМША № ЕАЭС KZ.7500525.01.01.02380

28.01.2026
дейін жарамды 27.01.2031
2 парақ

## 3. ЖАРЫЛЫСТАН ҚОРҒАУДЫ ҚАМТАМАСЫЗ ЕТУ КОНСТРУКЦИЯСЫ МЕН ҚҰРАЛДАРЫНЫҢ СИПАТТАМАСЫ

Электр пневматикалық түзгіштер құрамында 7,5% -дан кем магний, мырыш және цирконий бар алюминий қорытпасынан жасалған қақпағы бар корпуста орындалған. Электр пневматикалық түзгіштер күштерді өтеу қағидаты бойынша жұмыс істейтін 6109-1 немесе 6112-2 типті түрлендіргіш электр пневматикалық модульден (і/р-модулі) және одан кейін қосылған пневматикалық күшейткіштен тұрады.

Басқарушы тұрақты ток тұрақты магнит өрісінде орналасқан жылжымалы орауыш арқылы өтеді. Қозғалмалы катушкадан ток шамасына пропорционалды әсер ететін күш шүмектен жапқышқа түсетін ауа ағынынан пайда болатын динамикалық қысымның күшімен теңестіріледі.

Шүмектегі және шығудағы ауа қысымы тең. 0 мА кіру сигналы кезінде шығу қысымы серіппені реттеумен 100 мбар деңгейінде белгіленеді.

Қоректендіру қысымы төменгі камераға түседі және шығуда ауаның белгілі бір ағынын қамтамасыз етеді. Егер кіру тогы артса, катушка тығынды шүмекке тартады. Осының салдарынан мембранаға және конустық төлкеге қысым артады. Төменгі камерада да қысым артады. Бұл қысым мембранада әрекет ететін күштердің тепе-теңдігі орнатылғанға дейін артатын болады. Егер орауыш арқылы ток азайса, орауышқа күш азаяды, жапқыш шүмектен алыстап, шүмектегі қысым азаяды. Мембрана жоғары көтеріледі, конустық төлкені босатады және мембранадағы күштер қайтадан тепе-теңдікке келгенше ауаны шығару ашылады.

Түрлендіргіштердің жарылыстан қорғалуы стандарттардың талаптарын орындаумен қамтамасыз етіледі: МСТ 31610.0-2019 (IEC 60079-0:2017), МСТ IEC 60079-1-2013, МСТ 31610.11-2014 (IEC 60079-11:2011).

## 4. ҚОЛДАНУДЫҢ АРНАЙЫ ШАРТТАРЫ

Ех-таңбалаудан кейін тұрған «Х» белгісі пайдалану кезінде қолданудың мынадай арнайы шарттарын сақтау қажеттігін білдіреді:

- электр пневматикалық түзгіштерді монтаждауды, пайдалануды, оларға техникалық қызмет көрсетуді өндірушінің техникалық құжаттамасы бойынша нұсқауларына сәйкес жүргізу;
- «Ex ia» орындалатын электр-пневматикалық түзгіштерді жарылыс қаупі бар аймақтан тыс орналасқан аппаратурамен қосу IIC санатындағы жарылыс қаупі бар газ қоспасы пайда болуы мүмкін үй-жайлар мен сыртқы қондырғылардың жарылыс қаупі бар аймақтарында орналасқан құрылғыларды қосу үшін сәйкестік сертификаты бар ұшқыннан қорғау тосқауылдары арқылы жүзеге асырылуы тиіс; электр-пневматикалық түзгіштердің кіріс және шығу параметрлері қосқыш кабельдің параметрлерін ескере отырып, қауіпсіздік кедергісінде көрсетілген электр параметрлеріне сәйкес болуы тиіс;
- дайындаушының құжаттамасында, техникалық паспортта және зауыттық тақтайшада көрсетілген шекті мәндерден асатын жағдайларда электр пневматикалық түзгіштерді пайдалануға тыйым салынады;
- механикалық зақымдануы бар электр пневматикалық түзгіштерді пайдалануға тыйым салынады;
- «Ex db» орындалатын электр-пневматикалық түзгіштер жарылыстан қорғаудың қажетті түрі мен деңгейін және қабықты қорғау дәрежесін қамтамасыз ететін сертификатталған кәбілдік кірмелермен және бітеуіштермен пайдаланылуы тиіс;
- жалпы өнеркәсіптік орындалған кәбілдік кірмелер мен бітеуіштерді пайдалануға тыйым салынады;
- кәбіл кірмелерінің пайдаланылмайтын тесіктерін бітеуіштермен жабу қажет;
- жарылыс отпейтін қосылыстар жөндеуге арналмаған;
- электр-пневматикалық түзгіштер бетінің температуралық класы/ең жоғары температурасы қоршаған ортаның температурасына/жұмыс ортасының (үдерісінің) температурасына байланысты белгіленеді;
- 80 °С температурада 6116-2 типті электр пневматикалық түзгіштерді пайдалану кезінде Та + 3 °С формуласы бойынша, сондай-ақ қоршаған ортаның төмен температурасында пайдалану үшін көзделген қосқыш кәбілдер пайдаланылуы тиіс.

«Х» белгіленген қолданудың арнайы шарттары ілеспе құжаттамада көрсетілуге тиіс.

Руководитель (уполномоченное лицо) органа по сертификации — (подпись) — Овчинникова Вера Александровна (Ф.И.О.)

М.П.

Эксперт (эксперт-аудитор) (эксперт/эксперты-аудиторы) — (подпись) — Бекетай Абылайхан Азимханұлы (Ф.И.О.)

Бланкті «ҚАОС» дайындады. Астана қ.

# 15 Appendix

## 15.1 Parts for retrofitting and accessories

**Table 3:** *Mounting accessories*

| Spare parts/accessories | Order no. |
|---|---|
| Wall and pipe mounting | 1400-6216 |
| Mounting bracket (1.4301) for wall mounting | 1400-7432 |
| Mounting unit for Type 6116 in various versions | M6116 |
| Mounting on Type 3766 [1)] | 1400-6227 |
| Mounting on Type 4765 [1)] | 1400-6223 |
| Mounting on Type 3760 [1)] | 1400-6224 |
| Mounting on cast yoke according to NAMUR [1)] | 1400-6217 |
| Mounting on rod-type yoke according to NAMUR [1)] | 1400-6218 |
| Male screw fitting G ¼ on hose with 4 mm inside diameter and 6 mm outside diameter, brass | 8582-1452 |
| Male screw fitting ¼ NPT on hose, 4 mm inside diameter and 6 mm outside diameter, brass | 8582-1523 |
| M20x1.5 cable gland, black polyamide (6 to 12 mm clamping range) | 8808-1011 |
| M20x1.5 cable gland, blue polyamide (6 to 12 mm clamping range) | 8808-1012 |
| M20x1.5 cable gland, nickel-plated brass (6 to 12 mm clamping range) | 1890-4875 |
| M20x1.5 cable gland, stainless steel 1.4305 (8 to 14.5 mm clamping range) | 8808-0160 |
| Cable gland ½ NPT, black polyamide (6 to 12 mm clamping range) | 8808-0145 |
| Cable gland ½ NPT, blue polyamide (6 to 12 mm clamping range) | 8808-0146 |
| Cable gland ½ NPT, nickel-plated brass (6 to 12 mm clamping range) | 8808-0140 |
| Vent plug G ¼, stainless steel 1.4305, IP66 (–45 to +80 °C) | 1790-7253 |
| Vent plug G ¼, stainless steel 1.4305, NEMA 4/Type 4 (–45 to +80 °C) | 1790-9646 |
| Filter | 0550-0213 |
| Restriction including filter | 1390-0186 |

[1)] Only mounting part not mounted and without any required piping; M6116 includes mounting

**Table 4:** *Accessories for subsequent pressure gauge mounting*

| Pressure gauge | Order no. |
|---|---|
| Pressure gauge: 0.2 to 1.2 bar pressure range | 0080-0185 |
| Pressure gauge: 0 to 6 bar pressure range | 0080-0186 |
| Pressure gauge: 0 to 10 bar pressure range | 8520-0032 |
| Pressure gauge: 0 to 0.6 MPa/0 to 6 kg/cm$^2$ pressure range | 0800-0204 |
| For all pressure gauges: screw fitting | 0250-1090 |

**Table 5:** *Accessories for positioner attachment*

| Positioner | Mounting instructions | Order no. |
|---|---|---|
| Type 3766-00<br>(model index .02 and higher) | Direct attachment to the positioner according to Fig. 15 (for positioner with M20x1.5 electrical connection) | 1400-6227 |
| | For older positioner models with PG 13.5 | 1400-6222 |
| Type 4765 | NAMUR attachment to the yoke of a control valve according to Fig. 16 | 1400-6223 |
| Type 3760 | Attachment to the yoke of the Type 3510 Micro-flow Valve according to Fig. 17 or to the NAMUR rib | 1400-6224 |

## 15.2 After-sales service

Contact our after-sales service for support concerning service or repair work or when malfunctions or defects arise.

You can reach our after-sales service at the following e-mail address:

▶ aftersalesservice@samsongroup.com

The addresses of SAMSON AG, its subsidiaries, representatives and service facilities worldwide can be found on our website (▶ www.samsongroup.com) or in all product catalogs.

Please submit the following details:

- Type designation
- Model number
- Configuration ID
- Serial number

SAMSON AKTIENGESELLSCHAFT
Weismüllerstraße 3 · 60314 Frankfurt am Main, Germany
Phone: +49 69 4009-0 · Fax: +49 69 4009-1507
samson@samsongroup.com · www.samsongroup.com

2026-05-06 | English | 4000299863 | 1.16