# MOUNTING AND OPERATING INSTRUCTIONS

**EB 8004-GR EN**

**Translation of original instructions**

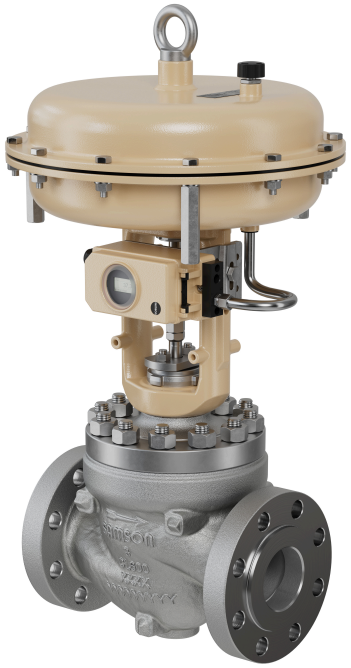

SMS MG-1 Pneumatic Control Valve:
Type 251GR Valve with Type 3271 Actuator

## Type 251GR Valve · ANSI version

In combination with an actuator, e.g. a Type 3271 or Type 3277 Pneumatic Actuator

Edition April 2026

### Note on these mounting and operating instructions

These mounting and operating instructions (EB) assist you in mounting and operating the device safely. The instructions are binding for handling SAMSON devices. The images shown in this document are for illustration purposes only. The actual product may vary.

⇨ For the safe and proper use of these instructions, read them carefully and keep them for later reference.

⇨ If you have any additional questions not related to the contents of this document, contact SAMSON's After-sales Service (aftersalesservice@samsongroup.com).

Documents relating to the device, such as the mounting and operating instructions, are available on our website:
▶ https://www.samsongroup.com/en/downloads/documentation

### Definition of signal words

**⚠ DANGER**

*Hazardous situations which, if not avoided, will result in death or serious injury*

**⚠ WARNING**

*Hazardous situations which, if not avoided, could result in death or serious injury*

***NOTICE***

*Property damage message or malfunction*

***Note***

*Additional information*

***Tip***

*Recommended action*

**1 Safety instructions and measures ..... 5**
1.1 Notes on possible severe personal injury ..... 7
1.2 Notes on possible personal injury ..... 7
1.3 Notes on possible property damage ..... 9
1.4 Notes on the use of an RFID tag ..... 10
1.5 Warnings on the device ..... 10

**2 Markings on the device ..... 11**
2.1 Valve nameplate ..... 11
2.2 Actuator nameplate ..... 12
2.3 Material numbers ..... 12
2.4 Label when an adjustable packing is installed ..... 12
2.5 Markings when used for oxygen service ..... 12
2.6 Optional RFID tag ..... 12

**3 Design and principle of operation ..... 13**
3.1 Fail-safe positions ..... 15
3.2 Versions ..... 16
3.3 Additional fittings ..... 16
3.4 Valve accessories ..... 16
3.5 Technical data ..... 16

**4 Shipment and on-site transport ..... 23**
4.1 Accepting the delivered goods ..... 23
4.2 Removing the packaging from the valve ..... 23
4.3 Transporting and lifting the valve ..... 23
4.3.1 Transporting the valve ..... 24
4.3.2 Lifting the valve ..... 25
4.4 Storing the valve ..... 26

**5 Installation ..... 27**
5.1 Installation conditions ..... 27
5.2 Preparation for installation ..... 28
5.3 Mounting the device ..... 29
5.3.1 Mounting the external anti-rotation fixture ..... 29
5.3.2 Mounting the actuator onto the valve ..... 36
5.4 Installing the valve into the pipeline ..... 37
5.5 Testing the installed valve ..... 38
5.5.1 Leak test ..... 39
5.5.2 Travel motion ..... 40
5.5.3 Fail-safe position ..... 40
5.5.4 Pressure test ..... 40

**6 Start-up ..... 41**

**7 Operation ..... 43**
7.1 Normal operation ..... 43
7.2 Manual operation ..... 43

**8 Malfunctions ..... 44**
8.1 Troubleshooting ..... 44
8.2 Emergency action ..... 45

**9 Servicing and conversion ..... 46**
9.1 Periodic testing ..... 47
9.2 Preparation for servicing or conversion work ..... 51
9.3 Mounting the actuator on the valve after service and conversion work ..... 51

9.4 Service or conversion work ... 51
9.4.1 Replacing gaskets in versions with standard bonnet or insulating section ... 52
9.4.2 Replacing the packing in versions with standard bonnet or insulating section ... 53
9.4.3 Replacing the trim in versions with standard bonnet or insulating section ... 55
9.4.4 Replacing the plug/piston on the plug/piston stem ... 58
9.5 Ordering spare parts and operating supplies ... 58

**10 Decommissioning ... 59**

**11 Removal ... 61**
11.1 Removing the valve from the pipeline ... 62
11.2 Removing the actuator from the valve ... 62

**12 Repairs ... 63**
12.1 Returning devices to SAMSON ... 63

**13 Disposal ... 64**

**14 Certificates ... 65**

**15 Appendix ... 73**
15.1 Tightening torques, lubricants and tools ... 73
15.1.1 Tightening torques ... 73
15.1.2 Lubricants ... 74
15.1.3 Tools ... 75
15.2 Spare parts ... 76
15.3 After-sales service ... 78

# 1 Safety instructions and measures

### Intended use

The SAMSON Type 251GR Globe Valve (belonging to the SMS Series) in combination with an actuator (e.g. Type 3271 or Type 3277 Pneumatic Actuator) is designed to regulate the flow rate, pressure or temperature of liquids, gases or vapors.

The valve with its actuator is designed to operate under exactly defined conditions (e.g. operating pressure, process medium, temperature). Therefore, operators must ensure that the control valve is only used in operating conditions that meet the specifications used for sizing the valve at the ordering stage. In case operators intend to use the control valve in applications or conditions other than those specified, contact SAMSON. SAMSON does not assume any liability for damage resulting from the failure to use the device for its intended purpose or for damage caused by external forces or any other external factors.

⇨ Refer to the technical data and nameplate for limits and fields of application as well as possible uses.

### Reasonably foreseeable misuse

The control valve is not suitable for the following applications:

- Use outside the limits defined during sizing and by the technical data
- Use outside the limits defined by the valve accessories connected to the control valve

Furthermore, the following activities do not comply with the intended use:

- Use of non-original spare parts
- Performing service and repair work not described

### Qualifications of operating personnel

The control valve must be mounted, started up, serviced and repaired by fully trained and qualified personnel only; the accepted industry codes and practices must be observed. According to these mounting and operating instructions, trained personnel refers to individuals who are able to judge the work they are assigned to and recognize possible hazards due to their specialized training, their knowledge and experience as well as their knowledge of the applicable standards.

Welding operations are to be performed only by personnel who has the necessary qualification to perform the applied welding procedure and handle the materials used.

Explosion-protected versions of this device are to be operated only by personnel who has undergone special training or instructions or who is authorized to work on explosion-protected devices in hazardous areas.

The operating personnel must be specially trained for the correct and safe handling of oxygen when valves are used for oxygen service.

**Tip**

*All SAMSON staff receives appropriate training before performing any activities in connection with oxygen service. SAMSON's After-sales Service also offers such training courses for service staff to allow them to learn how to handle devices for the above listed applications correctly and safely.*

### Personal protective equipment

SAMSON recommends checking the hazards posed by the process medium being used (e.g. ▶ GESTIS hazardous substances database).

Depending on the process medium and/or the activity, the protective equipment required includes:

- Protective clothing, gloves, eye protection and respiratory protection in applications with hot, cold and/or corrosive media
- Wear hearing protection when working near the valve
- Hard hat
- Safety harness, e.g. when working at height
- Safety footwear, if applicable ESD (electrostatic discharge) footwear

⇨ Check with the plant operator for details on further protective equipment.

### Revisions and other modifications

Revisions, conversions or other modifications of the product are not authorized by SAMSON. They are performed at the user's own risk and may lead to safety hazards, for example. Furthermore, the product may no longer meet the requirements for its intended use.

### Safety features

The fail-safe position of the control valve upon air supply or control signal failure depends on the actuator used (see associated actuator documentation). When the valve is combined with a SAMSON Type 3271 or Type 3277 Pneumatic Actuator, the

control valve moves to a certain fail-safe position upon supply air or control signal failure (see Chapter 3.1). The fail-safe action of the actuator is the same as its direction of action and is specified on the nameplate of SAMSON actuators.

### Warning against residual hazards

To avoid personal injury or property damage, plant operators and operating personnel must prevent hazards that could be caused in the control valve by the process medium, the operating pressure, the signal pressure or by moving parts by taking appropriate precautions. Plant operators and operating personnel must observe all hazard statements, warning and caution notes in these mounting and operating instructions.

Hazards resulting from the special working conditions at the installation site of the valve must be identified in a risk assessment and prevented through the corresponding standard operating procedures drawn up by the operator.

### Responsibilities of the operator

Operators are responsible for proper use and compliance with the safety regulations. Operators are obliged to provide these mounting and operating instructions as well as the referenced documents to the operating personnel and to instruct them in proper operation. Furthermore, operators must ensure that operating personnel or third parties are not exposed to any danger.

Operators are additionally responsible for ensuring that the limits for the product defined in the technical data are observed. This also applies to the start-up and shutdown procedures. Start-up and shutdown procedures fall within the scope of the operator's duties and, as such, are not part of these mounting and operating instructions. SAMSON is unable to make any statements about these procedures since the operative details (e.g. differential pressures and temperatures) vary in each individual case and are only known to the operator.

### Responsibilities of operating personnel

Operating personnel must read and understand these mounting and operating instructions as well as the referenced documents and observe the specified hazard statements, warnings and caution notes. Furthermore, operating personnel must be familiar with the applicable health, safety and accident prevention regulations and comply with them.

### Referenced standards, directives and regulations

The device fulfills the requirements of the following directives for the European Economic Area (EEA):

- Machinery Directive 2006/42/EC
- Pressure Equipment Directive 2014/68/EU
  (depending on version, see certificate)

Devices with an EAC marking fulfill the requirements of the following regulations for the Eurasian Economic Union (EAEU):

- TR CU 010/2011
- TR CU 012/2011
  (depending on version, see certificate)
- TR CU 032/2013
  (depending on version, see certificate)

The declarations of conformity are included in Chapter 14.

Non-electric valve versions whose bodies are not lined with an insulating material coating do not have their own potential ignition source according to the risk assessment stipulated in Clause 5.2 of DIN EN ISO 80079-36, even in the rare incident of an operating fault. Therefore, such valve versions do not fall within the scope of ATEX Directive 2014/34/EU.

⇨ For connection to the equipotential bonding system, observe the requirements specified in Clause 6.4 of DIN EN 60079-14 (VDE 0165-1).

### Referenced documents

The following documents apply in addition to these mounting and operating instructions:

- Mounting and operating instructions for mounted valve accessories (positioner, solenoid valve etc.)
- Mounting and operating instructions for the mounted actuator, for example:
  - ▶ EB 8310-X for Type 3271 and Type 3277 Pneumatic Actuators
- Manual ▶ H 02: Appropriate Machinery Components for SAMSON Pneumatic Control Valves with a Declaration of Conformity of Final Machinery
- For oxygen service: Manual ▶ H 01
  The packaging of valves constructed and sized for oxygen service has the following label on it:

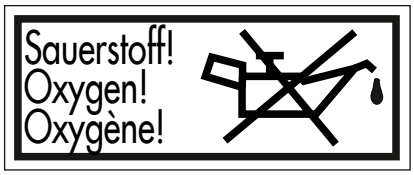


– If a device contains a substance listed as a substance of very high concern (SVHC) on the candidate list of the REACH regulation, the document "Additional Information on Your Inquiry/Order" is added to the SAMSON order documents. This document includes the SCIP number assigned to the devices concerned. This number can be entered into the database on the European Chemicals Agency (ECHA) website (▶ https://www.echa.europa.eu/scip-database) to find out more information on the SVHC contained in the device.
  Further information on material compliance at SAMSON is available at ▶ www.samsongroup.com > About SAMSON > Environment, Social & Governance > Material Compliance

## 1.1 Notes on possible severe personal injury

**⚠ DANGER**

**Risk of bursting in pressure equipment.**

Control valves and pipelines are pressure equipment. Excessive pressurization or improper opening can lead to valve components bursting.

⇨ Observe the maximum permissible pressure for valve and plant.

⇨ Before starting any work on pressure-bearing or pressure-retaining parts belonging to the valve assembly, depressurize all plant sections affected as well as the valve.

⇨ Drain the process medium from the plant sections affected as well as from the valve.

**⚠ DANGER**

**Risk of injury due to incorrect handling of oxygen or cryogenic gases in applications.**

The valve can be used for oxygen service or applications with cryogenic gases. Oxygen is a hazardous substance, which reacts quickly, leading to combustion and explosions. Contact with cryogenic gases causes severe frostbite and cold burns (cryogenic burns). Operating personnel must be trained for these applications. Unqualified operating personnel expose themselves and others to an increased risk of injury.

⇨ Operating personnel must be sufficiently trained and be made aware of the hazards in applications involving oxygen or cryogenic gases.

⇨ Instructions and information on how to safely handle devices for oxygen service can be found in the Manual ▶ H 01.

## 1.2 Notes on possible personal injury

**⚠ WARNING**

**Risk of burn injuries due to hot or cold components and pipelines.**

Depending on the process medium, valve components and pipelines may get very hot or cold during operation and cause burn injuries.

⇨ Follow the standard operating procedures provided by the plant operator.

  In the event of a potential risk:

  ⇨ Allow components and pipelines to cool down or warm up to the ambient temperature.

  ⇨ Wear protective clothing and safety gloves.

**⚠ WARNING**

**Risk of hearing loss or deafness due to loud noise.**

Noise emission (e.g. cavitation or flashing) may occur during operation caused by the process medium and the operating conditions. Additionally, a loud noise may briefly occur through the sudden venting of the pneumatic actuator or pneumatic valve accessories not fitted with noise-reducing elements. Both can damage hearing.

⇨ Follow the standard operating procedures provided by the plant operator.

  In the event of a potential risk:

  ⇨ Wear hearing protection when working near the valve.

**⚠ WARNING**

**Risk of personal injury due to exhaust air being vented or compressed air escaping from pneumatically operated components.**

When the valve is operated with a pneumatic actuator or pneumatic valve accessories, exhaust air is vented from the actuator, for example, while the valve is operating and when the valve opens or closes.

⇨ Install the control valve in such a way that vent openings are not located at eye level and the actuator does not vent at eye level in the work position.

⇨ Use suitable mufflers and vent plugs.

⇨ Wear eye protection when working in close proximity to pneumatic fittings and in the danger zone of the vent openings.

**⚠ WARNING**

**Crush hazard arising from moving parts.**

The control valve contains moving parts (actuator stem and plug/piston stem), which can injure hands or fingers if inserted into the valve.

⇨ Do not insert hands or finger into the yoke while the air supply is connected to the actuator.

⇨ Before working on the pneumatic control valve, disconnect and lock the pneumatic air supply as well as the control signal.

⇨ Do not impede the movement of the actuator stem and plug/piston stem by inserting objects into the yoke.

⇨ Before unblocking the actuator stem and plug/piston stem after they have become blocked (e.g. due to seizing up after remaining in the same position for a long time), release any stored energy in the actuator (e.g. spring compression). See associated actuator documentation.

**⚠ WARNING**

**Risk of personal injury due to preloaded springs in pneumatic actuators.**

Valves in combination with pneumatic actuators with preloaded springs are under tension. These control valves with SAMSON pneumatic linear actuators (e.g. Type 3271/3277 or Type 3371) can be identified by the long bolts protruding from the bottom of the actuator.

⇨ Before starting any work on the actuator, which requires the actuator to be opened, or when the actuator stem has become blocked, relieve the compression from the preloaded springs (see associated actuator documentation).

**⚠ WARNING**

**Risk of personal injury due to incorrect removal of the anti-rotation fixture under tension.**

Once the actuator has been mounted on the valve and the assembly is ready for use, the clamps of the anti-rotation fixture on the plug stem are under tension.

⇨ Follow the instructions in this document during mounting or removal.

⇨ Remove the actuator from the valve or otherwise ensure that it cannot transmit any forces to the actuator stem before removing the anti-rotation fixture from the plug stem.

**⚠ WARNING**

**Risk of personal injury due to pressurized components and as a result of process medium being discharged.**

Valves with a bellows seal have a test connection at the top on the intermediate piece.

⇨ Do not loosen the screw on the test connection while the valve is pressurized.

**⚠ WARNING**

**Risk of personal injury due to residual process medium in the valve.**

While working on the valve, residual medium can flow out of the valve and, depending on its properties, cause personal injury, e.g. (chemical) burns.

⇨ Follow the standard operating procedures provided by the plant operator.

In the event of a potential risk:

⇨ If possible, drain the process medium from the plant sections affected and from the valve.

⇨ Wear protective clothing, safety gloves, respiratory protection and eye protection.

**⚠ WARNING**

**Risk of personal injury due to incorrect operation, use or installation as a result of information on the control valve being illegible.**

Over time, markings, labels and nameplates on the control valve may become covered with dirt or become illegible in some other way. As a result, hazards may go unnoticed and the necessary instructions not followed. There is a risk of personal injury.

⇨ Keep all relevant markings and inscriptions on the device in a constantly legible state.

⇨ Immediately renew damaged, missing or incorrect nameplates or labels.

**⚠ WARNING**

**Exposure to hazardous substances poses a serious risk to health.**

Certain lubricants and cleaning agents are classified as hazardous substances. These substances have a special label and a material safety data sheet (MSDS) issued by the manufacturer.

⇨ Make sure that an MSDS is available for any hazardous substance used. If necessary, contact the manufacturer to obtain an MSDS.

⇨ Inform yourself about the hazardous substances and their correct handling.

## 1.3 Notes on possible property damage

***NOTICE***

**Risk of valve damage due to contamination (e.g. solid particles) in the pipeline.**

The plant operator is responsible for cleaning the pipelines in the plant.

⇨ Flush the pipelines before start-up.

***NOTICE***

**Risk of valve damage due to unsuitable medium properties.**

The valve is designed for a process medium with defined properties.

⇨ Only use the process medium specified for sizing the equipment.

***NOTICE***

**Risk of leakage and valve damage due to over- or under-torquing.**

Observe the specified torques when tightening control valve components. Over-torquing leads to parts wearing out more quickly. Under-torquing may cause leakage.

⇨ Observe tightening torques.

***NOTICE***

**Risk of valve damage due to the use of unsuitable tools.**

Certain tools are required to work on the valve.

⇨ Only use tools approved by SAMSON.

***NOTICE***

**Risk of valve damage due to the use of unsuitable lubricants.**

The lubricants to be used depend on the valve material. Unsuitable lubricants may corrode and damage surfaces.

⇨ Only use lubricants approved by SAMSON.

***NOTICE***

**Risk of the process medium being contaminated through the use of unsuitable lubricants and/or contaminated tools and components.**

⇨ If necessary (e.g. for oxygen service), keep the valve and the tools used free from solvents and grease.

⇨ Make sure that only suitable lubricants are used.

***NOTICE***

**Risk of valve damage due to work being carried out by personnel not qualified for such tasks.**

The plant operator or specialist company performing the welding is responsible for the selection of the welding procedure and the actual welding operations on the valve. This also applies to any required heat treatment to be performed on the valve.

⇨ Only allow qualified welding personnel to carry out welding operations.

⇨ Before welding painted valves into the pipeline and/or subject them to heat in any way, observe the temperature resistance of the paint coating system. The number of the coating system used can be found in the order documentation. The temperature resistance of all of our coating systems is specified in the Brochure ▶ WA 268.

## 1.4 Notes on the use of an RFID tag

The RFID tag is subject to certain restrictions due to its application range (technical specifications).

⇨ Observe the explosion protection certificates of the RFID tag when it is to be used on valves installed in potentially explosive atmospheres.

⇨ Do not expose the RFID tag to strong electric fields.

⇨ Avoid electrostatic charging.

⇨ Observe the application range (technical specifications) of the RFID tag.

## 1.5 Warnings on the device

| Warning symbols | Location on the device |
|---|---|
|  | 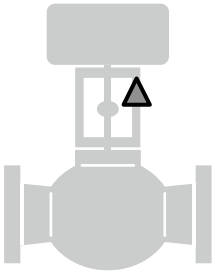 |
| **Meaning of the warning** | |
| **Warning against moving parts**<br>There is a risk of injury to hands or fingers due to the stroking movement of the actuator and plug stem if they are inserted into the yoke while the air supply is connected to the actuator. | |

# 2 Markings on the device

## 2.1 Valve nameplate

The nameplate shown was up to date at the time of publication of this document. The nameplate on the device may differ from the one shown.

The nameplate is affixed to the yoke of the valve.

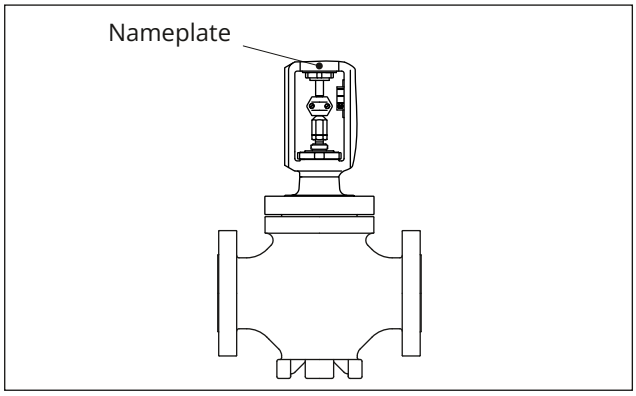


**Fig. 1:** *Valve nameplate (example shown)*

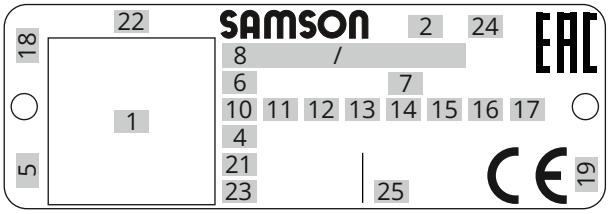


**Fig. 2:** *Inscriptions on the valve nameplate*

| Item | Inscription meaning |
|---|---|
| 1 | Identification code (scannable) |
| 2 | Type designation |
| 4 | Material |
| 5 | Month and year of manufacture |
| 6 | Nominal size:<br>DIN: **DN...** · ANSI: **NPS...** · JIS: **DN**... |
| 7 | Pressure rating:<br>DIN: **PN...** · ANSI: **CL...** · JIS: **...K** |
| 8 | Order number/item |
| 10 | Flow coefficient:<br>DIN: **KV** · ANSI/JIS: **CV** |
| 11 | Characteristic:<br>**%**: Equal percentage<br>**LIN**: Linear<br>**mod-lin**: Modified linear |
| | **NO/NC**: On/off service |
| 12 | Seat-plug seal:<br>**ME**: Metal<br>**HA**: Carbide metal<br>**ST**: Metal base material with Stellite® facing<br>**KE**: Ceramic<br>**PT**: PTFE soft seal<br>**PK**: PEEK soft seal |
| 13 | Seat code (trim material): On request |
| 14 | Pressure balancing:<br>**D**: DIN · **B**: ANSI/JIS |
| | Version:<br>**M**: Mixing valve<br>**V**: Diverting valve |
| 15 | Noise reduction:<br>**1**: Flow divider (ST) 1<br>**2**: ST 2<br>**3**: ST 3<br>**1/PSA**: ST 1 standard and integrated in seat for PSA valve<br>**AC-1/AC-2/AC-3/AC-5**: Anti-cavitation trim, versions 1 to 5<br>**LK**: Perforated plug<br>**LK1/LK2/LK3**: Perforated plug with flow divider<br>**ST 1 to 3**<br>**MHC1**: Multi-Hole Cage<br>**CC1**: Combi Cage<br>**ZT1**: Zero Travel<br>**LDB**: Low dB<br>**CDST3/4/6**: 3-, 4- or 6-stage trim (cavitation dirty service trim) |
| 16 | PSA version:<br>**PSA** |
| 17 | Cage/seat style:<br>**RT**: Seat with retainer<br>**CG**: Guided cage<br>**TH**: Screwed-in seat<br>**SF**: Suspended cage, flanged seat |
| 18 | Country of origin |
| 19 | ID of the notified body (EU), for example:<br>– **0062** for Bureau Veritas Services SAS, 4 place des Saisons, 92400 Courbevoie – France |
| 21 | **PED**: Pressure Equipment Directive |
| | **G1/G2**: Gases and vapors<br>Fluid group 1 = Hazardous<br>Fluid group 2 = Other |
| | **L1**: Liquids<br>Fluid group 1 = Hazardous<br>Fluid group 2 = Other |
| | **I/II/III**: Category 1 to 3 |
| 22 | Serial number |
| 23 | NE 53 (NAMUR Recommendation) |

| Item | Inscription meaning |
|---|---|
| 24 | Actuator type: Item 2**/3374-XX** (only when type-tested according to DIN EN 14597 and only with Type 3374 Electric Actuator) |
| 25 | **TSmin/TSmax**: Permissible min./max. temperatures for the valve **.../... °C** |

**Note**

*Fig. 2 and the inscription table list all possible characteristics and options that may appear on a valve nameplate. Only the inscriptions relevant to the ordered Type 251GR Valve actually appear on the nameplate.*

**Tip**

*SAMSON recommends to include the device's serial number (item 22 on the nameplate) and/or its material number (as specified in the order confirmation) in the plant documentation for the associated tag number.*

*The serial number enables you to view the device's current technical data as configured by SAMSON. The material number enables you to view the device's technical data as configured by SAMSON upon delivery of the device. To view these data, go to our website at:*

▶ *www.samsongroup.com > Products > Electronic nameplate*

*For example, you can also use the associated information to order a new nameplate from our after-sales service, if required.*

## 2.2 Actuator nameplate

See associated actuator documentation.

## 2.3 Material numbers

The seat and plug of the valves have an item number written on them. You can contact us stating this item number to find out which material is used. Additionally, a seat code is used to identify the trim material. This seat code is specified on the nameplate.

## 2.4 Label when an adjustable packing is installed

An instructional label is affixed to the valve when an adjustable packing is installed (see Fig. 3).




**Fig. 3:** *Label when an adjustable packing is installed*

## 2.5 Markings when used for oxygen service

See Manual for Oxygen Service ▶ H 01.

## 2.6 Optional RFID tag

The RFID tag is located directly next to the nameplate on valves ordered with the RFID tag option. It contains the same data as the identification code on the electronic nameplate. It can be read using a smartphone, tablet or RFID reader. Application range according to the technical data (see Chapter 3.5).

# 3 Design and principle of operation

The Type 251GR Valve is a single-seated globe valve. The Type 251GR Valve is preferably combined with a SAMSON Type 3271 or Type 3277 Pneumatic Actuator.

A seat and plug with plug stem or a cage and piston with piston stem are installed in the valve. The plug/piston stem is connected to the actuator stem by the stem connector clamps and is sealed by a packing.

The springs in the pneumatic actuator are located either above or below the diaphragm depending on the selected fail-safe action (see Chapter 3.1). A change in the signal pressure acting on the diaphragm causes the plug/piston to move. The actuator size is determined by the diaphragm area.

The medium flows through the valve in the direction indicated by the arrow. A rise in signal pressure causes the force acting on the diaphragm in the actuator to increase. The springs are compressed. Depending on the selected direction of action, the actuator stem retracts or extends. As a result, the position of the plug in the seat or the position of the piston in the cage changes and determines the flow rate through the valve and the pressure $p_2$ with it.

**Tip**

*SAMSON recommends the use of positioners with integrated diagnostic firmware (see Chapter 3.4) for control valves used for on/off service. The partial stroke test included in this software helps prevent a shut-off valve normally in its end position from seizing up or getting jammed.*

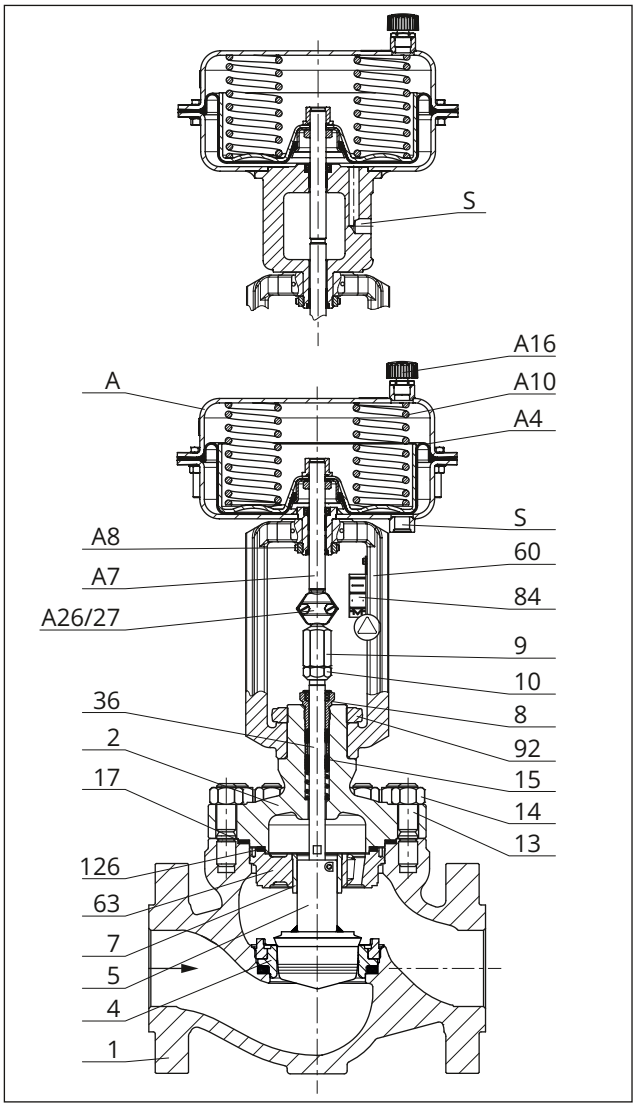


**Fig. 4:** *Type 251GR Valve with Type 3271 (below) or Type 3277 (top) Pneumatic Actuator*

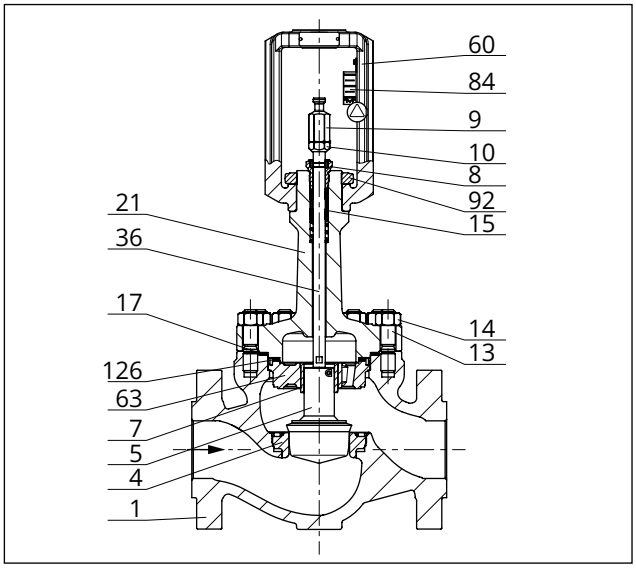


**Fig. 5:** *Type 251GR Valve with insulating section*

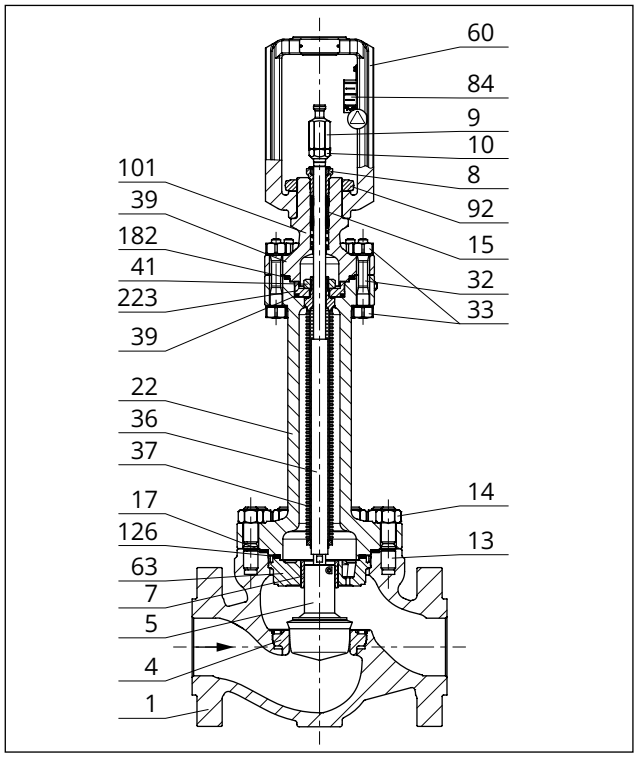


**Fig. 6:** *Type 251GR Valve with bellows seal*

## Legend for Fig. 4 to Fig. 6

| | | | |
|---|---|---|---|
| 1 | Valve body | 39 | Spiral wound gasket |
| 2 | Standard bonnet | 41 | Bellows nut |
| 4 | Seat | 60 | Yoke |
| 5 | Plug | 63 | Support element |
| 7 | Bushing | 84 | Travel indicator scale |
| 8 | Threaded bushing/ packing follower | 92 | Castellated nut |
| 9 | Stem connector nut | 101 | Valve bonnet (version with bellows seal) |
| 10 | Lock nut | 126 | Spiral wound gasket |
| 13 | Stud | 182 | Spiral wound gasket |
| 14 | Hex nut | 223 | Anti-rotation fixture (bellows seal) |
| 15 | Packing | | |
| 17 | Spiral wound gasket | A | Actuator |
| 21 | Insulating section | A4 | Actuator diaphragm |
| 22 | Intermediate piece for bellows seal | A7 | Actuator stem |
| | | A8 | Ring nut |
| 32 | Bolt | A10 | Spring |
| 33 | Nut | A16 | Vent plug |
| 36 | Plug stem | A26/27 | Stem connector clamps |
| 37 | Metal bellows | | |
| | | S | Signal pressure connection |

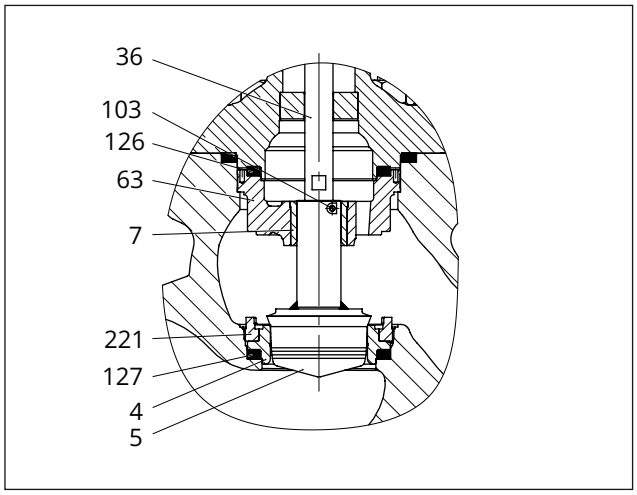


**Fig. 7:** *Trim versions: Screwed-in seat and plug*

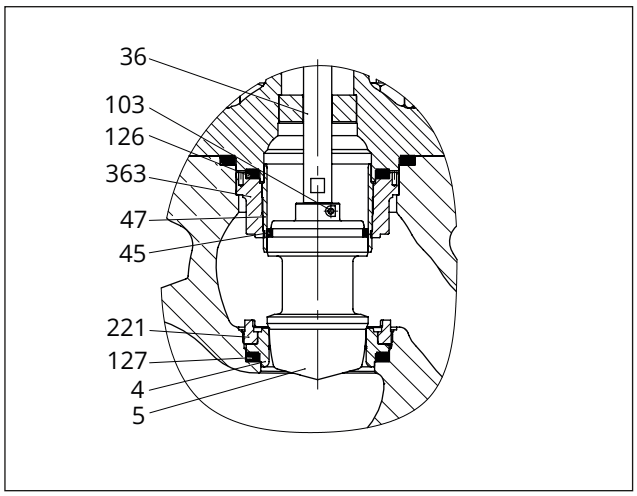


**Fig. 8:** *Trim versions: Screwed-in seat and plug with pressure balancing*

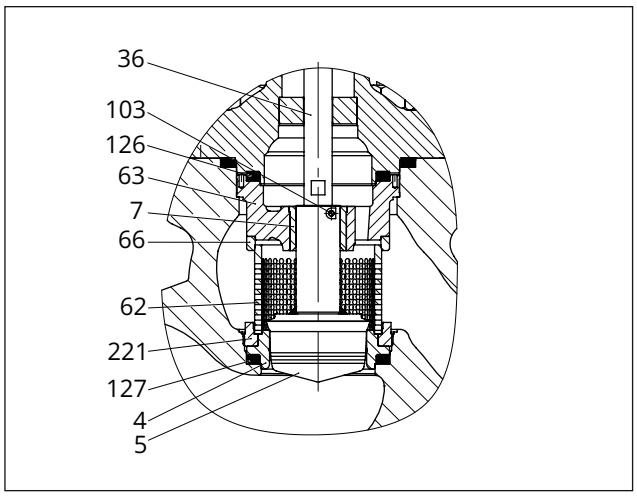


**Fig. 9:** *Trim versions: Screwed-in seat and plug with flow divider ST1*

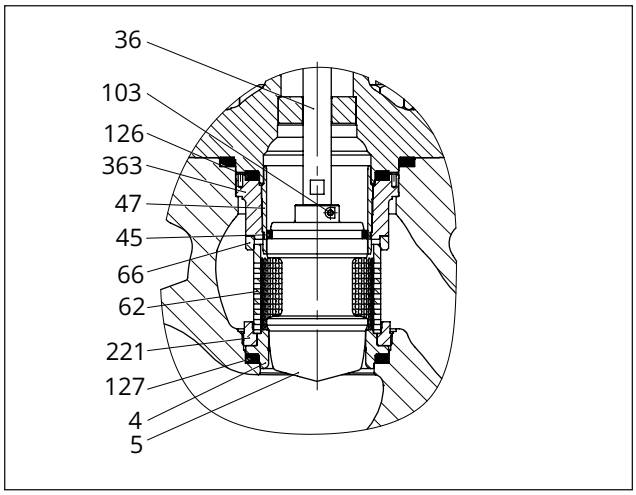


**Fig. 10:** *Trim versions: Screwed-in seat and plug with pressure balancing and flow divider ST1*

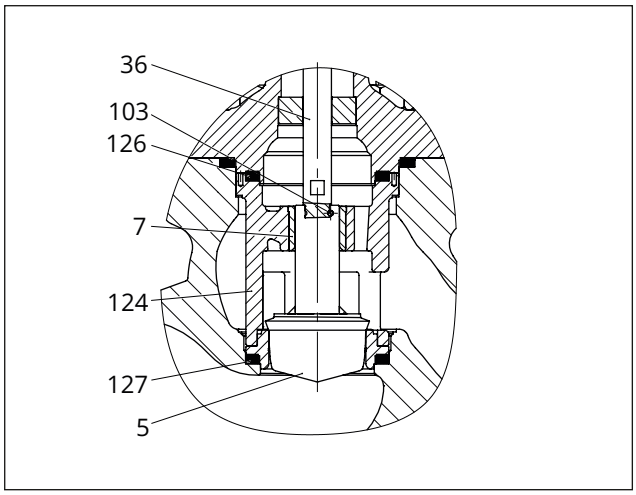


**Fig. 11:** *Trim versions: Clamped-in seat and plug*

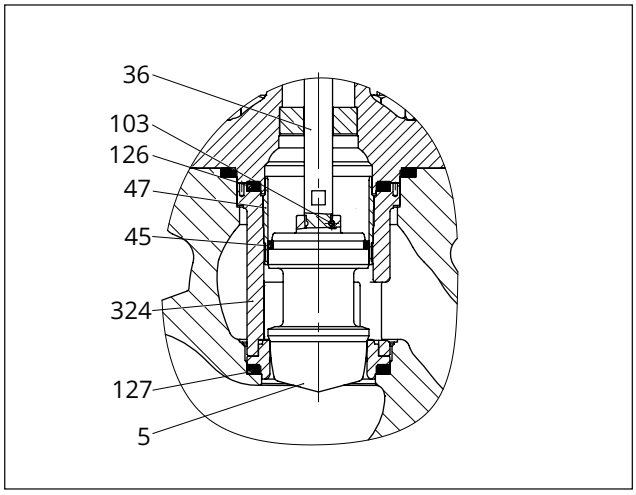


**Fig. 12:** *Trim versions: Clamped-in seat and plug with pressure balancing*

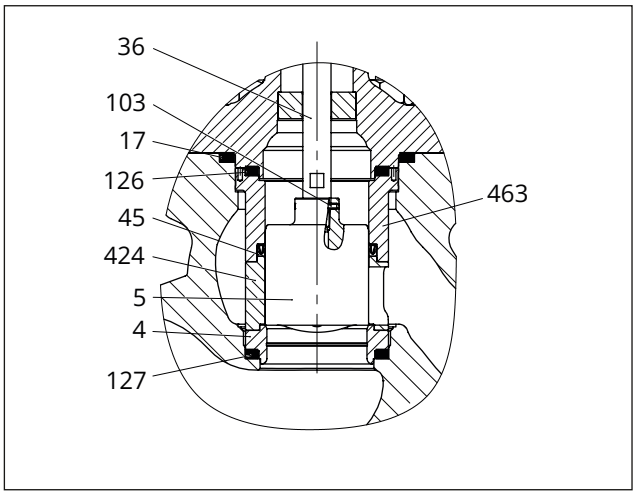


**Fig. 13:** *Trim versions: Cage and piston*

**Legend for Fig. 7 to Fig. 13**

| | |
|---|---|
| 4 | Seat |
| 5 | Plug/piston |
| 7 | Bushing |
| 17 | Spiral wound gasket |
| 36 | Plug/piston stem |
| 45 | Seal (pressure balancing) |
| 47 | Plug guide |
| 62 | Flow divider |
| 63 | Support element (version with screwed-in seat) |
| 363 | Support element (pressure-balanced version with screwed-in seat) |
| 463 | Cylinder (version with cage and piston) |
| 66 | Clamping ring for flow divider ST 1 |
| 103 | Locking pin |
| 124 | Seat retainer (version with clamped-in seat) |
| 324 | Seat retainer (pressure-balanced version with clamped-in seat) |
| 424 | Cage |
| 126 | Spiral wound gasket |
| 127 | Spiral wound gasket |
| 221 | Retaining ring for seat |

## 3.1 Fail-safe positions

The fail-safe position of the control valve upon air supply or control signal failure depends on the actuator used (see associated actuator documentation).

Depending on how the compression springs are arranged in the SAMSON Type 3271 and Type 3277 Pneumatic Actuator, the control valve has one of two different fail-safe positions:

– **Actuator stem extends (FA)**
  When the signal pressure is reduced or the air supply fails, the springs move the actuator stem downward and close the valve. The valve opens when the signal pressure is increased enough to overcome the force exerted by the springs.

– **Actuator stem retracts (FE)**
  When the signal pressure is reduced or the air supply fails, the springs move the actuator stem upward and open the valve. The valve closes

when the signal pressure is increased enough to overcome the force exerted by the springs.

**Tip**

*The actuator's direction of action can be reversed, if required. Refer to the mounting and operating instructions of the pneumatic actuator: ▶ EB 8310-X for Type 3271 and Type 3277*

## 3.2 Versions

### With insulating section/bellows seal

The modular design allows an insulating section or bellows seal to be fitted to the standard valve version.

### Actuators

In these instructions, the preferable combination with a SAMSON Type 3271 or Type 3277 Pneumatic Actuator is described. The pneumatic actuator (with or without handwheel) can be replaced by another pneumatic actuator in a different size, but with the same travel.

⇨ Observe the maximum permissible actuator force.

**Note**

*If the travel range of the actuator is larger than the travel range of the valve, the spring assembly in the actuator must be preloaded so that the travel ranges match (see associated actuator documentation).*

The basic pneumatic actuator can be replaced by a pneumatic actuator with additional handwheel or by an electric actuator (see Information Sheet ▶ T 8300).

## 3.3 Additional fittings

### Strainer

SAMSON recommends installing a SAMSON strainer upstream of the valve. It prevents solid particles in the process medium from damaging the control valve.

### Bypass and shut-off valves

SAMSON recommends installing a shut-off valve both upstream of the strainer and downstream of the control valve and installing a bypass line. The bypass ensures that the plant does not need to be shut down for service and repair work on the valve.

### Insulation

Control valves can be insulated to reduce heat energy transfer.

If applicable, read the instructions in Chapter 5.

### Test connection

Versions with bellows seal fitted with a test connection (G ⅛) at the top of the intermediate piece allow the sealing ability of the bellows to be monitored.

Particularly for liquids and vapors, SAMSON recommends installing a suitable leakage indicator (e.g. a contact pressure gauge, an outlet to an open vessel or an inspection glass).

### Safety guard

For operating conditions that require increased safety (e.g. in cases where the control valve is freely accessible to untrained staff), a safety guard must be installed to rule out a crush hazard arising from moving parts (actuator and plug stem). Plant operators are responsible for deciding whether a guard is to be used. The decision is based on the risk posed by the plant and its operating conditions.

### Noise reduction

Trims with flow dividers can be used to reduce noise emission (▶ T 8081).

## 3.4 Valve accessories

See Information Sheet ▶ T 8350

## 3.5 Technical data

The nameplates on the valve and actuator provide information on the control valve version (see Chapter 2).

**Note**

*More information on Type 251GR Valve is available in the following data sheets:*

- *▶ T 8003-GR (DIN version)*
- *▶ T 8004-GR (ANSI version)*

### Noise emissions

SAMSON is unable to make general statements about noise emissions. The noise emissions depend on the valve version, plant facilities and process medium.

### Optional RFID tag

Application range according to the technical specifications and the explosion protection certificates. These documents are available on our website:
▶ www.samsongroup.com > Products > Electronic nameplate

The permissible range for temperatures at the RFID tag is between -40 and +185 °F (-40 and +85 °C).

**i** ***Note***

*The associated actuator documentation applies to actuators, e.g. SAMSON pneumatic actuators:*

- *▶ T 8310-1 for Type 3271 and Type 3277 Actuators up to 750 cm² actuator area*
- *▶ T 8310-2 for Type 3271 Actuator with 1000 cm² actuator area and larger*
- *▶ T 8310-3 for Type 3271 Actuator with 1400-60 cm² actuator area*

## Technical data

**Table 1:** *Technical data for Type 251GR · ANSI version*

| **Material** | | **Cast steel A216 WCC** | **Cast steel A217 WC6** | **Cast stainless steel A351 CF8M** |
|---|---|---|---|---|
| Nominal size and pressure rating | | Class 150/300/600: NPS ½ to 12 · Class 900: NPS ½ to 6[3] | | |
| Type of end connections | Flanges | RF and RTJ according to ASME B16.5 | | |
| | Welding ends | According to ASME B16.25 | | |
| Seat-plug seal | | Metal seal · High-performance metal seal | | |
| Characteristic | | Equal percentage · Linear · Mod. linear · On/off | | |
| Rangeability | | 50:1 | | |
| Conformity | | CE EAC[6] | | |
| **Temperature ranges in °F (°C) · Permissible operating pressures according to pressure-temperature diagrams (see Information Sheet ▶ T 8000-2)** | | | | |
| Body with standard bonnet | | -20 to +482 (-29 to +250) with PTFE packing · Up to +797 (+425) with graphite packing | | |
| Body with insulating section | | -20 to +797 (-29 to +425) | -20 to +932 (-29 to +500) | -58 to +1022 (-50 to +550) |
| Body with bellows seal | | -20 to +797 (-29 to +425) | -20 to +842 (-29 to +450) | -58 to +842 (-50 to +450) |
| Trim[1] | Metal seal | -58 to +1022 (-50 to +550) | | |
| | Balanced with PTFE | -58 to +482 (-50 to +250) | | |
| | Balanced, metal seal[4][5] | Room temperature up to +1022 (+550) | | |
| **Leakage class according to ANSI FCI 70-2** | | | | |
| Trim | Metal seal | Standard: IV · High-performance metal seal: V | | |
| | Balanced, metal seal | With PTFE ring (standard): IV · High-performance metal seal: V | | |

1) Only in combination with suitable body material
2) The temperature limits (in °F and °C) are not directly converted temperatures.
3) Class 900 only for version with clamped-in seat or cage trim
4) Only for version with cage trim
5) Only up to NPS 4
6) Only up to NPS 8

## Materials

**Table 2:** *Materials for Type 251GR · ANSI version*

| Body of standard version | | Cast steel A216 WCC | | | Cast steel A217 WC6 | | | Cast stainless steel A351 CF8M |
|---|---|---|---|---|---|---|---|---|
| Valve bonnet | | A216 WCC | | | A217 WC6 | | | A351 CF8M |
| Plug stem | | 316/316L or XM-19-H | | | | | | |
| Seal ring for balanced plug (plug/piston) | | PTFE with carbon · Metal seal[7] | | | | | | |
| Guide bushing | | 420[1] | | | 420[1][6] | | | B574 N06455 |
| Packing | | PTFE packing loaded by internal or external springs or adjustable graphite packing | | | | | | |
| Body gasket | | Spiral wound gasket, graphite/316L | | | | | | |
| Version with screwed-in seat and plug | Plug[3] | 410[2] | 420[1] | 316/316L[2] | 410[2] | 420[1] | 316/316L[2] | 316/316L[2] |
| | Seat | 410[2] | 420[1] | 316/316L[2] | 410[2] | 420[1] | 316/316L[2] | 316/316L[2] |
| | Seat fastening | CA6NM-B | | | CA6NM-B | | | CF3M |
| Version with clamped-in seat and plug | Plug[3] | 410[2] | 420[1] | 316/316L[2] | 410 2[2] | 420[1] | 316/316L[2] | 316/316L[2] |
| | Seat | 410[2] | 420[1] | 316/316L[2] | 410 2[2] | 420[1] | 316/316L[2] | 316/316L[2] |
| | Seat fastening | CA6NM-B | | | CA6NM-B | | | CF8M |
| Version with piston and cage | Piston | 410 2[1] | 420[1] | 316/316L[4][5] | 410 2[1] | 420[1] | 316/316L[4][5] | 316/316L[4][5] |
| | Cage | 410 2[1] | 420[1] | 316/316L | 410 2[1] | 420[1] | 316/316L | 316/316L |
| | Seat | 410 2[1] | 420[1] | 316/316L[2] | 410 2[1] | 420[1] | 316/316L[2] | 316/316L[2] |
| | Cylinder | 410 2[1] | 420[1] | 316/316L | 410 2[1] | 420[1] | 316/316L | 316/316L |

1) Heat treated

2) Also with Stellite®-faced facing

3) Plug made of Stellite® 6 (up to seat bore Ø ≤55 mm) available

4) Hard chrome-plated guiding surface

5) Guiding surface also Stellite® faced when the facing is Stellite®-faced

6) T >932 °F (>500 °C): Made of N06625

7) Only for version with cage trim

## Dimensions

**Table 3:** *Dimensions in inch and mm for SMS MG-1 and SMS MG-7 Control Valves*

| Valve | | NPS | ½ | 1 | 1½ | 2 | 3 | 4 | 6 | 8 | 10 | 12 |
|---|---|---|---|---|---|---|---|---|---|---|---|---|
| Length L (RF flanges) | Class 150 | in | 7.25 | 7.25 | 8.75 | 10 | 11.75 | 13.88 | 17.75 | 21.38 | 26.5 | 29.02 |
| | | mm | 184 | 184 | 222 | 254 | 298 | 352 | 451 | 543 | 673 | 737 |
| | Class 300 | in | 7.5 | 7.75 | 9.25 | 10.5 | 12.5 | 14.5 | 18.62 | 22.38 | 27.87 | 30.51 |
| | | mm | 190 | 197 | 235 | 267 | 318 | 368 | 473 | 568 | 708 | 775 |
| | Class 600 | in | 8 | 8.25 | 9.88 | 11.25 | 13.25 | 15.5 | 20 | 24 | 29.61 | 32.24 |
| | | mm | 203 | 210 | 251 | 286 | 337 | 394 | 508 | 610 | 752 | 819 |
| | Class 900 | in | 11.5 | 11.5 | 13.12 | 14.75 | 17.38 | 20.12 | 28.12 | – | – | – |
| | | mm | 292 | 292 | 333 | 375 | 441 | 511 | 714 | – | – | – |
| Length L (RTJ flanges) | Class 600 | in | 7.94 | 8.25 | 9.88 | 11.37 | 13.37 | 15.62 | 20.12 | 24.12 | 29.72 | 32.36 |
| | | mm | 201 | 210 | 251 | 289 | 340 | 397 | 511 | 613 | 755 | 822 |
| | Class 900 | in | 11.5 | 11.5 | 13.12 | 14.87 | 17.5 | 20.24 | 28.24 | – | – | – |
| | | mm | 292 | 292 | 333 | 378 | 444 | 514 | 717 | – | – | – |

| Valve | | NPS | ½ | 1 | 1½ | 2 | 3 | 4 | 6 | 8 | 10 | 12 |
|---|---|---|---|---|---|---|---|---|---|---|---|---|
| Length L (welding ends) | Class 150 to 600 | in | 8 | 8.25 | 9.88 | 11.25 | 13.25 | 15.5 | 20 | 24 | 29.61 | 32.36 |
| | | mm | 203 | 210 | 251 | 286 | 337 | 394 | 508 | 610 | 752 | 819 |
| | Class 900 | in | 11 | 11 | 13 | 14.75 | 18.12 | 20.87 | 30.25 | – | – | – |
| | | mm | 279 | 279 | 330 | 375 | 460 | 530 | 768 | – | – | – |
| Height H4 **standard version** | | in | 6.3 | 6.3 | 6.3 | 7.32 | 8.27 | 9.61 | 12.56 | 15.94 | 20.47 | 23.31 |
| | | mm | 160 | 160 | 160 | 186 | 210 | 244 | 319 | 405 | 520 | 592 |
| Height H4 with **insulating section** | | in | 8.86 | 8.86 | 10.04 | 11.42 | 12.4 | 14.76 | 20.87 | 24.02 | 32.68 | 35.43 |
| | | mm | 225 | 225 | 255 | 290 | 315 | 375 | 530 | 610 | 830 | 900 |
| Height H4 with **bellows seal** | | in | 15.98 | 15.98 | 15.71 | 18.27 | 22.05 | 22.64 | 33.46 | [2] | – | – |
| | | mm | 406 | 406 | 399 | 464 | 560 | 575 | 850 | [2] | – | – |
| H8 for actuator | 350 cm² | in | 11.26 | 11.26 | 11.26 | 11.26 | 11.26 | 11.26 | – | – | – | – |
| | | mm | 286 | 286 | 286 | 286 | 286 | 286 | – | – | – | – |
| | 350v2 cm² | in | 11.26 | 11.26 | 11.26 | 11.26 | 11.26 | 11.26 | – | – | – | – |
| | | mm | 286 | 286 | 286 | 286 | 286 | 286 | – | – | – | – |
| | 355v2 cm² | in | 11.26 | 11.26 | 11.26 | 11.26 | 11.26 | 11.26 | 19.8 | – | – | – |
| | | mm | 286 | 286 | 286 | 286 | 286 | 286 | 503 | – | – | – |
| | 750 cm² | in | 11.26 | 11.26 | 11.26 | 11.26 | 11.26 | 11.26 | 19.8 | – | – | – |
| | | mm | 286 | 286 | 286 | 286 | 286 | 286 | 503 | – | – | – |
| | 1000 cm² | in | 13.43 | 13.43 | 13.43 | 13.43 | 13.43 | 13.43[3]<br>17.17[4] | 19.8 | 19.8 | 23.15 | – |
| | | mm | 341 | 341 | 341 | 341 | 341 | 341[3]<br>436[4] | 503 | 503 | 588 | – |
| | 1400-60 cm² | in | 13.43 | 13.43 | 13.43 | 13.43 | 13.43 | 13.43[3]<br>17.17[4] | 19.8 | 19.8 | 23.15 | – |
| | | mm | 341 | 341 | 341 | 341 | 341 | 341[3]<br>436[4] | 503 | 503 | 588 | – |
| | 1400-120 cm² | in | – | – | – | 20.71 | 20.71 | 20.71 | 23.15<br>28.94[6] | 23.15<br>28.94[6] | 28.94 | 28.94 |
| | | mm | – | – | – | 526 | 526 | 526 | 588<br>735[6] | 588<br>735[6] | 735 | 735 |
| | 2800 cm² | in | – | – | – | 20.71 | 20.71 | 20.71 | 23.15<br>28.94[6] | 23.15<br>28.94[6] | 28.94 | 28.94 |
| | | mm | – | – | – | 526 | 526 | 526 | 588<br>735[6] | 588<br>735[6] | 735 | 735 |
| | 2x 2800 cm² | in | – | – | – | 20.71 | 20.71 | 20.71 | 23.15<br>28.94[6] | 23.15<br>28.94[6] | 28.94 | 28.94 |
| | | mm | – | – | – | 526 | 526 | 526 | 588<br>735[6] | 588<br>735[6] | 735 | 735 |

| Valve | | NPS | ½ | 1 | 1½ | 2 | 3 | 4 | 6 | 8 | 10 | 12 |
|---|---|---|---|---|---|---|---|---|---|---|---|---|
| H2[1] | Cl 150 to 300 | in | 1.73 | 2 | 2.44 | 2.97 | 4.15 | 5.47 | 7.28 | 8.46 | 9.84 | 10.87 |
| | | mm | 44 | 51 | 62 | 75.5 | 105.5 | 139 | 185 | 215 | 250 | 276 |
| | Cl 600 | in | 1.73 | 2 | 2.44 | 2.97 | 4.15 | 5.59 | 7.28 | 8.46 | 10.98 | 12.13 |
| | | mm | 44 | 51 | 62 | 75.5 | 105.5 | 142 | 185 | 215 | 279 | 308 |
| | Class 900 | in | 1.73 | 2.24 | 2.44 | 3.05 | 4.19 | 5.98 | 7.83 | 8.46 | – | – |
| | | mm | 44 | 57 | 62 | 77.5 | 106.5 | 152 | 199 | 215 | – | – |

1) The H2 dimension is the distance from the middle of the flow channel to the bottom of the valve body. The dimension up to the bottom of the flange may differ. It may be lower or higher. Flange standards (see Table 1).

2) On request

3) With 30 or 38 mm travel

4) With 60 mm travel

6) With 60, 75 or 90 mm travel

## Dimensional drawings

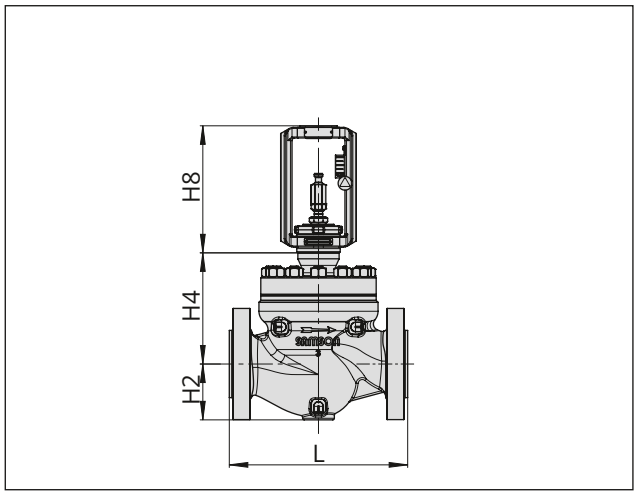


**Fig. 14:** *Standard version of Type 251GR Valve*

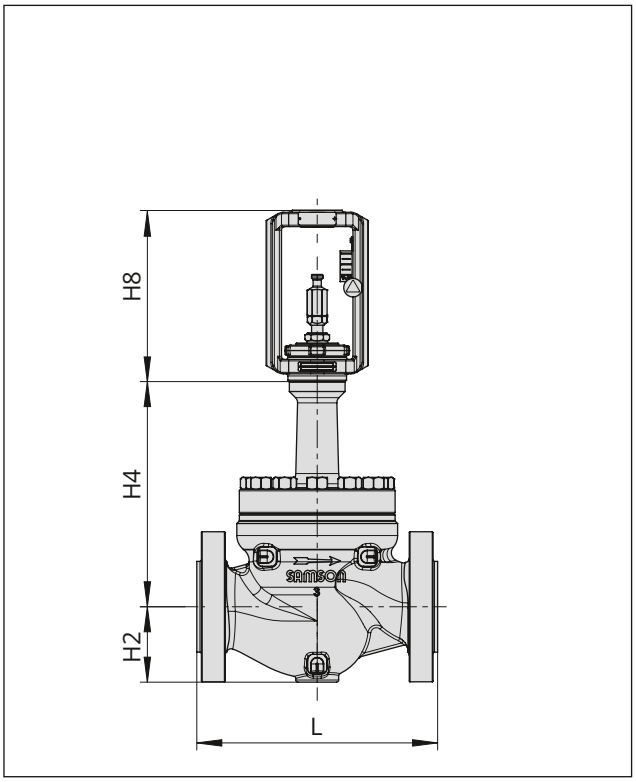


**Fig. 15:** *Type 251GR Valve with insulating section*

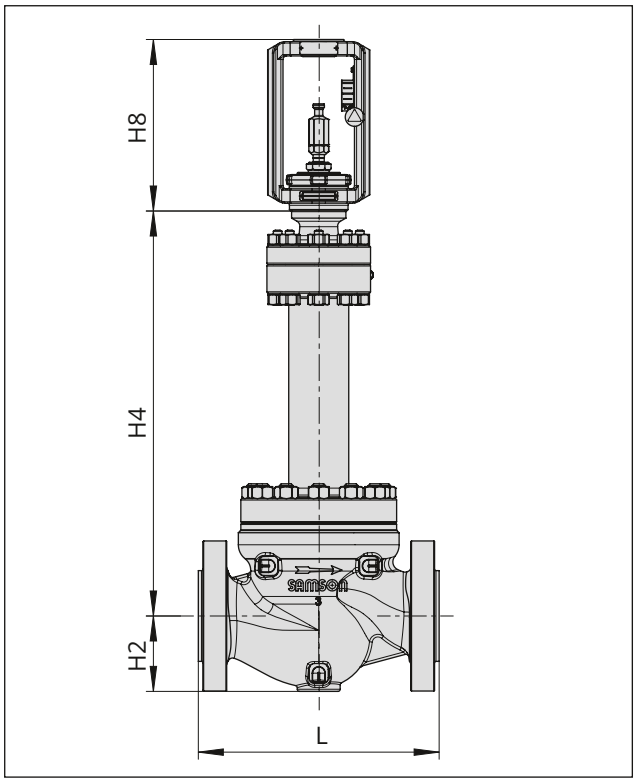


**Fig. 16:** *Type 251GR Valve with bellows seal*

## Weights

**Table 4:** *Weights in lbs and kg for Type 251GR Valve with RF flanges according to ASME B16.5*

| Valve | | NPS | ½ | 1 | 1½ | 2 | 3 | 4 | 6 | 8 | 10 | 12 |
|---|---|---|---|---|---|---|---|---|---|---|---|---|
| **Standard version (standard bonnet)** | | | | | | | | | | | | |
| Valve[1] without actuator | Cl 150 | lbs (approx.) | 20 | 29 | 37 | 64 | 101 | 148 | 298 | 511 | 819 | 1227 |
| | | kg (approx.) | 9 | 13 | 17 | 29 | 46 | 67 | 135 | 232 | 371 | 557 |
| | Cl 300 | lbs (approx.) | 22 | 33 | 46 | 68 | 112 | 174 | 355 | 589 | 961 | 1422 |
| | | kg (approx.) | 10 | 15 | 21 | 31 | 51 | 79 | 161 | 267 | 436 | 645 |
| | Cl 600 | lbs (approx.) | 22 | 33 | 49 | 75 | 128 | 225 | 470 | 820 | 1389 | 1932 |
| | | kg (approx.) | 10 | 15 | 22 | 34 | 58 | 102 | 213 | 372 | 630 | 876 |
| | Cl 900 | lbs (approx.) | 33 | 46 | 66 | 119 | 194 | 298 | 681 | – | – | – |
| | | kg (approx.) | 15 | 21 | 30 | 54 | 88 | 135 | 309 | – | – | – |
| **Version with insulating section** | | | | | | | | | | | | |
| Valve[1] without actuator | Cl 150 | lbs (approx.) | 24 | 33 | 44 | 68 | 115 | 168 | 355 | 589 | 885 | 1296 |
| | | kg (approx.) | 11 | 15 | 20 | 31 | 52 | 76 | 161 | 267 | 401 | 588 |
| | Cl 300 | lbs (approx.) | 24 | 35 | 51 | 75 | 128 | 196 | 417 | 672 | 1027 | 1491 |
| | | kg (approx.) | 11 | 16 | 23 | 34 | 58 | 89 | 189 | 305 | 466 | 676 |
| | Cl 600 | lbs (approx.) | 26 | 37 | 53 | 82 | 132 | 231 | 500 | 851 | 1460 | 2000 |
| | | kg (approx.) | 12 | 17 | 24 | 37 | 60 | 105 | 227 | 386 | 662 | 907 |
| | Cl 900 | lbs (approx.) | 37 | 51 | 71 | 123 | 198 | 304 | 712 | – | – | – |
| | | kg (approx.) | 17 | 23 | 32 | 56 | 90 | 138 | 323 | – | – | – |

| Valve | | NPS | ½ | 1 | 1½ | 2 | 3 | 4 | 6 | 8 | 10 | 12 |
|---|---|---|---|---|---|---|---|---|---|---|---|---|
| **Version with bellows seal** | | | | | | | | | | | | |
| Valve[1] without actuator | Cl 150 | lbs (approx.) | – | 29 | 37 | 60 | 93 | 146 | 282 | 467 | – | – |
| | | kg (approx.) | – | 13 | 17 | 27 | 42 | 66 | 128 | 212 | – | – |
| | Cl 300 | lbs (approx.) | – | 33 | 44 | 64 | 106 | 174 | 346 | 551 | – | – |
| | | kg (approx.) | – | 15 | 20 | 29 | 48 | 79 | 157 | 250 | – | – |
| | Cl 600 | lbs (approx.) | – | 35 | 49 | 71 | 112 | 201 | 414 | 688 | – | – |
| | | kg (approx.) | – | 16 | 22 | 32 | 51 | 91 | 188 | 312 | – | – |
| | Cl 900 | lbs (approx.) | – | – | – | – | – | – | – | – | – | – |
| | | kg (approx.) | – | – | – | – | – | – | – | – | – | – |

1) The weights specified apply to a specific standard device configuration. Weights of other valve configurations may differ depending on the version (material, trim etc.).

# 4 Shipment and on-site transport

The work described in this chapter is to be performed only by personnel appropriately qualified to carry out such tasks.

## 4.1 Accepting the delivered goods

After receiving the shipment, proceed as follows:

1. Check the scope of delivery. Check that the specifications on the valve nameplate match the specifications in the delivery note. See Chapter 2 for more details on the nameplate.
2. Check the shipment for transportation damage. Report any damage to SAMSON and the forwarding agent (refer to delivery note).
3. Determine the weight and dimensions of the units to be lifted and transported in order to select the appropriate lifting equipment and lifting accessories. Refer to the transport documents and Chapter 3.5.

## 4.2 Removing the packaging from the valve

Observe the following sequence:

⇨ Do not open or remove the packaging until immediately before lifting the control valve to install it into the pipeline.

⇨ Leave the control valve in its transport container or on the pallet to transport it on site.

⇨ Do not remove the protective caps from the inlet and outlet until immediately before installing the valve into the pipeline. They prevent foreign particles from entering the valve.

⇨ Dispose and recycle the packaging in accordance with the local regulations.

## 4.3 Transporting and lifting the valve

**⚠ DANGER**

***Danger due to suspended loads falling.***

⇨ *Stay clear of suspended or moving loads.*

⇨ *Close off and secure the transport paths.*

**⚠ WARNING**

***Risk of lifting equipment tipping over and risk of damage to lifting accessories due to exceeding the rated lifting capacity.***

⇨ *Only use approved lifting equipment and accessories whose minimum lifting capacity is higher than the weight of the valve (including actuator and packaging, if applicable).*

**⚠ WARNING**

***Risk of personal injury due to the control valve tipping over.***

⇨ *Observe the control valve's center of gravity.*

⇨ *Secure the control valve against tipping over or turning.*

**⚠ WARNING**

***Risk of injury due to incorrect lifting without the use of lifting equipment.***

*Lifting the control valve without the use of lifting equipment may lead to injuries (back injuries in particular) depending on its weight.*

⇨ *Observe the occupational health and safety regulations valid in the country of use.*

**❗ *NOTICE***

***Risk of control valve damage due to incorrectly attached slings.***

*The lifting eyelet/eyebolt on SAMSON actuators is only intended for mounting and removing the actuator as well as lifting the actuator without valve. Do not use this lashing point to lift the entire control valve assembly.*

⇨ *When lifting the control valve, make sure that the slings attached to the valve body bear the entire load.*

⇨ *Do not attach load-bearing slings to the actuator, handwheel or any other parts.*

⇨ *Observe lifting instructions (see Chapter 4.3.2).*

**Tip**

*A swivel hoist can be screwed into SAMSON actuators with a female thread on the top diaphragm case in place of the eyebolt (see associated actuator documentation).*

*In contrast to the lifting eyelet/eyebolt, the swivel hoist is designed for setting a control valve assembly upright. The sling between the swivel hoist and rigging equipment (hook, shackle etc.) must not bear any load when lifting a control valve assembly. The sling only protects the control valve from tilting while being lifted.*

**Tip**

*Our after-sales service can provide more detailed transport and lifting instructions on request.*

### 4.3.1 Transporting the valve

The control valve can be transported using lifting equipment (e.g. crane or forklift).

⇨ Leave the control valve in its transport container or on the pallet to transport it.

⇨ Observe the transport instructions.

**Transport instructions**

- Protect the control valve against external influences (e.g. impact).
- Do not damage the corrosion protection (paint, surface coatings). Repair any damage immediately.
- Protect the piping and any mounted valve accessories against damage.
- Protect the control valve against moisture and dirt.
- The permissible transportation temperature of standard control valves is -4 to +149 °F (-20 to +65 °C).

**Note**

*Contact our after-sales service for the transportation temperatures of other valve versions.*

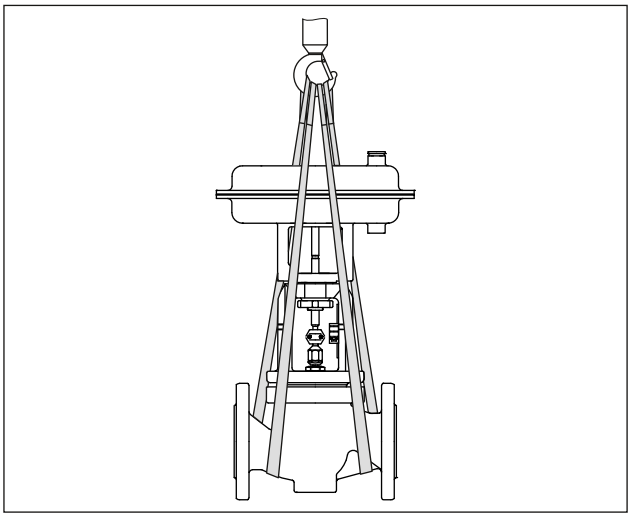

**Fig. 17:** *Lifting points on the control valve without additional lashing point on the actuator*

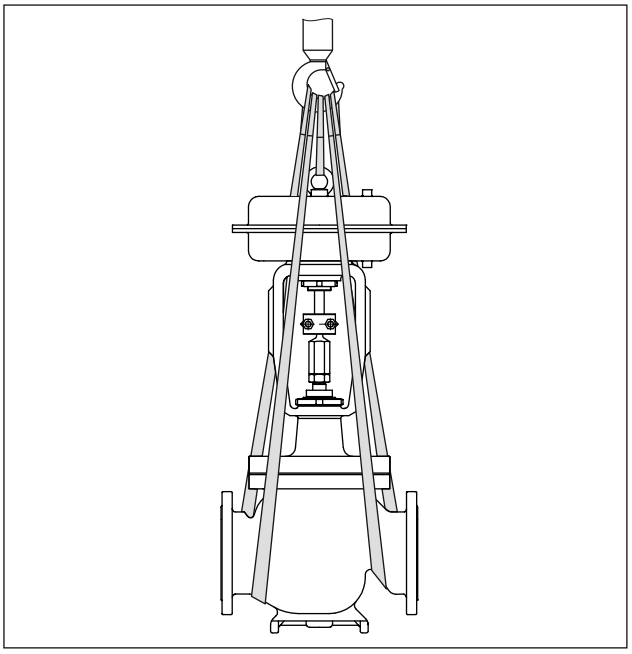

**Fig. 18:** *Lifting points on the control valve with additional lashing point on the actuator*

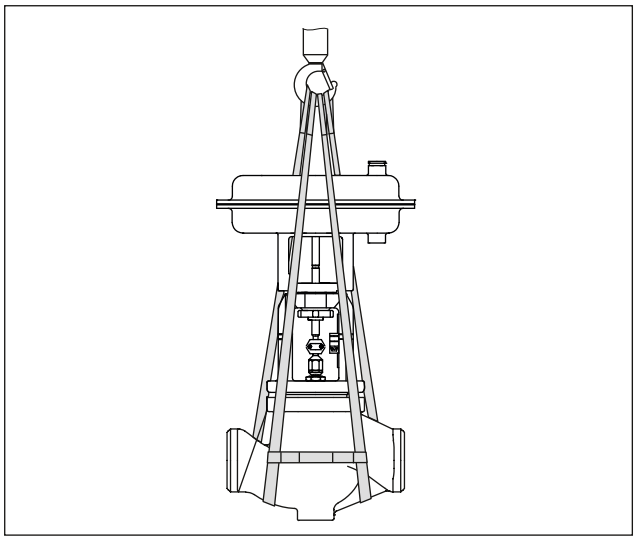

**Fig. 19:** *Lifting a control valve with welding ends (example shown): The attached slings are secured against slipping using a connector.*

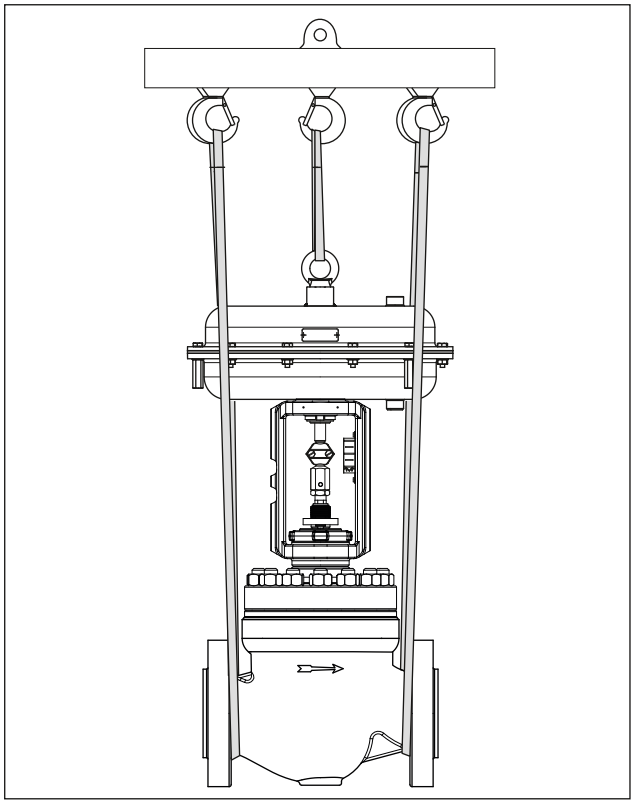

**Fig. 20:** *Lifting the control valve using a crossbeam*

## 4.3.2 Lifting the valve

See Fig. 17 to Fig. 20

To install a large control valve into the pipeline, use lifting equipment (e.g. crane or forklift) to lift it.

**Lifting instructions**

- Use a hook with safety latch to secure the slings from slipping off the hook during lifting and transporting.
- Secure slings against slipping.
- Make sure the slings can be removed from the device once it has been installed into the pipeline.
- Prevent the control valve from tilting or tipping over.
- Do not leave loads suspended when interrupting work for longer periods of time.
- Make sure that the axis of the pipeline is always horizontal during lifting and the axis of the plug stem is always vertical.
- Make sure that the additional sling between the lashing point on the actuator and rigging equipment (hook, shackle etc.) does not bear any load when lifting valves with an actuator that has a lifting eyelet/eyebolt on it. The sling only protects the control valve from tilting while being lifted. Before lifting the control valve, tighten the sling.

**Version with flanges**

1. Attach one sling to each flange of the body and to the rigging equipment (e.g. hook) of the crane or forklift.
2. **Mounted actuator with lashing point:** Attach other slings to the lashing point on the actuator and to the rigging equipment.
3. Carefully lift the control valve. Check whether the lifting equipment and accessories can bear the weight.
4. Move the control valve at an even pace to the site of installation.
5. Install the control valve into the pipeline (see Chapter 5).
6. After installation in the pipeline, check whether the flanges are bolted tight and the valve in the pipeline holds.
7. Remove slings.

**Version with welding ends**

1. Attach one sling to each welding end of the body and to the rigging equipment (e.g. hook) of the crane or forklift.
2. Secure the slings attached to the body against slipping using a connector.
3. **Mounted actuator with lashing point:** Attach other slings to the lashing point on the actuator and to the rigging equipment.

4. Carefully lift the control valve. Check whether the lifting equipment and accessories can bear the weight.
5. Move the control valve at an even pace to the site of installation.
6. Install the control valve into the pipeline (see Chapter 5).
7. After installation, check whether the weld seams hold.
8. Remove slings.

## 4.4 Storing the valve

**NOTICE**

***Risk of valve damage due to improper storage.***

⇨ *Observe the storage instructions.*

⇨ *Avoid longer storage periods.*

⇨ *Contact SAMSON in case of different storage conditions or longer storage times.*

**Note**

*SAMSON recommends to regularly check the control valve and the prevailing storage conditions during long storage periods.*

**Storage instructions**

- Protect the control valve against external influences (e.g. impact).
- Secure the control valve assembly in the stored position against slipping or tipping over.
- Do not damage the corrosion protection (paint, surface coatings). Repair any damage immediately.
- Protect the control valve against moisture and dirt. Store it at a relative humidity of less than 75 %. In damp spaces, prevent condensation. If necessary, use a drying agent or heating.
- Make sure that the ambient air is free of acids or other corrosive media.
- The permissible storage temperature of standard control valves is -4 to +149 °F (-20 to +65 °C). Contact our after-sales service for the storage temperatures of other valve versions.
- Do not place any objects on the control valve.
- For storage periods longer than 4 months, SAMSON recommends storing the following valves upright with the actuator on top:
  - ≥NPS 4 in versions with pressure balancing
  - ≥NPS 6 in versions without pressure balancing

**Special storage instructions for elastomers**

Elastomer, e.g. actuator diaphragm

- To keep elastomers in shape and to prevent cracking, do not bend them or hang them up.
- SAMSON recommends a storage temperature of 59 °F (15 °C) for elastomers.
- Store elastomers away from lubricants, chemicals, solutions and fuels.

**Tip**

*Our after-sales service can provide more detailed storage instructions on request.*

# 5 Installation

The work described in this chapter is to be performed only by personnel appropriately qualified to carry out such tasks.

## 5.1 Installation conditions

### Work position

The work position for the control valve is the front view looking onto the operating controls (including valve accessories).

Plant operators must ensure that, after installation of the device, the operating personnel can perform all necessary work safely and easily access the device from the work position.

### Pipeline routing

The inlet and outlet lengths (see Table 5) vary depending on several variables and process conditions and are intended as recommendations. Contact SAMSON if the lengths are significantly shorter than the recommended lengths.

To ensure that the control valve functions properly, proceed as follows:

- ⇨ Observe the recommended inlet and outlet lengths (see Table 5). Contact SAMSON if the valve conditions or state of the process medium are different from those specified.
- ⇨ Install the control valve free of stress and with the least amount of vibrations as possible. Read sections 'Mounting position' and 'Support and suspension' in this chapter.
- ⇨ Install the control valve allowing sufficient space to remove the actuator and valve or to perform service and repair work on them.

**Table 5:** *Inlet and outlet lengths*

| | 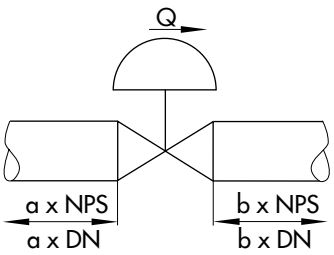 Globe valve | Q Flow rate<br>a Inlet length<br>b Outlet length | |
|---|---|---|---|
| **State of process medium** | **Valve conditions** | **Inlet length a** | **Outlet length b** |
| Gases | Ma ≤ 0.3 | 2 | 4 |
| | 0.3 ≤ Ma ≤ 0.7 | 2 | 10 |
| Vapor | Ma ≤ 0.3 | 2 | 4 |
| | 0.3 ≤ Ma ≤ 0.7 | 2 | 10 |
| | Wet steam (percentage of condensate >5 %) | 2 | 20 |
| Liquids | Free of cavitation/w < 10 m/s | 2 | 4 |
| | Cavitation producing noise/w ≤ 3 m/s | 2 | 4 |
| | Cavitation producing noise/3 < w < 5 m/s | 2 | 10 |
| | Critical cavitation/w ≤ 3 m/s | 2 | 10 |
| | Critical cavitation/3 < w < 5 m/s | 2 | 20 |
| Flashing | – | 2 | 20 |
| Multi-phase | – | 10 | 20 |

### Mounting position

Generally, SAMSON recommends installing the valve with the actuator upright and on top of the valve.

In the following versions/applications, the valve **must** be installed with the actuator on top:

- Nominal sizes NPS 4 and larger
- Valves with insulating section or bellows seal for low temperatures below 14 °F (-10 °C)

⇨ Contact SAMSON if the mounting position is not as specified above.

### Support and suspension

**i** ***Note***

*The plant engineering company is responsible for selecting and implementing a suitable support or suspension of the installed control valve and the pipeline.*

Depending on the valve version and mounting position, the valve, actuator and pipeline must be supported or suspended.

Valves, which are not installed in the pipeline in the upright position with the actuator on top, must be supported or suspended.

### Valve accessories

⇨ During connection of valve accessories, make sure that they are easily accessible and can be operated safely from the work position.

### Vent plugs

Vent plugs are screwed into the exhaust air ports of pneumatic and electropneumatic devices. They ensure that any exhaust air that forms can be vented to the atmosphere (to avoid excess pressure in the device). Furthermore, the vent plugs allow air intake to prevent a vacuum from forming in the device.

⇨ Locate the vent plug on the opposite side to the work position of operating personnel.

## 5.2 Preparation for installation

Before installation, make sure the following conditions are met:

- The valve is clean.
- The valve and all valve accessories (including piping) are not damaged.

- The valve data on the nameplate (type designation, nominal size, material, pressure rating and temperature range) match the plant conditions (nominal size and pressure rating of the pipeline, medium temperature etc.). See Chapter 2 for more details on the nameplate.
- The requested or required additional pipe fittings (see Chapter 3.3) have been installed or prepared as necessary before installing the valve.

**NOTICE**

***Risk of control valve damage due to incorrect insulation.***

⇨ *Only insulate control valves up to the bonnet flange of the valve body (see Fig. 21). This also applies to versions with bellows seal or insulating section at medium temperatures below 32 °F (0 °C) or above 428 °F (220 °C). If the insulating section is insulated, it will not function properly.*

⇨ *Do not insulate valves mounted to comply with NACE MR0175 requirements and which have nuts and bolts that are not suitable for sour gas environments.*

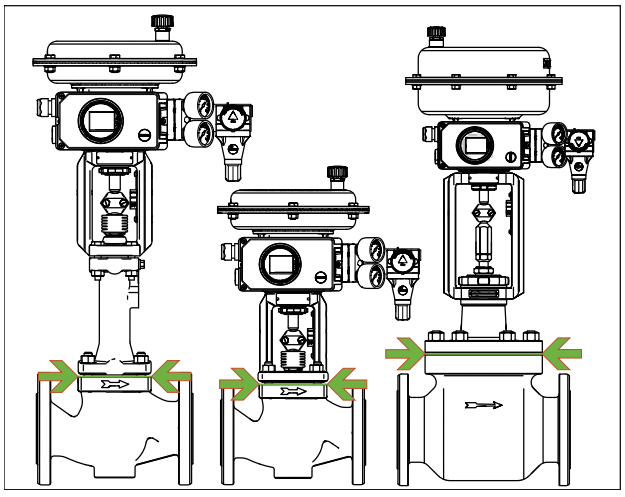

**Fig. 21:** *Limit of insulation for control valves (example shown)*

Proceed as follows:

⇨ Lay out the necessary material and tools to have them ready during installation work.

⇨ Flush the pipelines.

**Note**

*The plant operator is responsible for cleaning the pipelines in the plant.*

⇨ For steam applications, dry the pipelines. Moisture will damage the inside of the valve.

⇨ Check any mounted pressure gauges to make sure they function properly.

⇨ When the valve and actuator are already assembled, check the tightening torques of the bolted joints. Components may loosen during transport.

## 5.3 Mounting the device

The activities listed below are necessary to install the valve and before it can be started up.

**NOTICE**

***Risk of leakage and valve damage due to over- or under-torquing.***

*Observe the specified torques when tightening control valve components. Over-torquing leads to parts wearing out more quickly. Under-torquing may cause leakage.*

⇨ *Observe tightening torques.*

**NOTICE**

***Risk of valve damage due to the use of unsuitable tools.***

*Certain tools are required to work on the valve.*

⇨ *Only use tools approved by SAMSON.*

### 5.3.1 Mounting the external anti-rotation fixture

Before mounting the actuator, the external anti-rotation fixture must be mounted onto the plug stem in some cases. The valve must be closed beforehand. For SAMSON Type 3271 and Type 3277 Actuators with Type 3273 Hand-operated Actuator, observe the mounting and operating instructions of the hand-operated actuator (handwheel) to mount the anti-rotation fixture (▶ EB 8312-X).

**Standard version for Series SMS Valves in nominal sizes DN 150 to 300/NPS 6 to 12**

See Fig. 22 and Fig. 23

1. **Version with packing flange:**
   a) Gradually unthread the two packing nuts (163) at the hex head in a crisscross pattern.
   b) Lift the two packing nuts (including disk springs when packing flange is loaded by external spring elements) as well as the packing flange (162) upward over the studs (164) off the valve bonnet (2/21).

   **Version with centrally fastened packing:**

   Continue as described in step 2.
2. Insert ball bearings (310) into the recesses in the bonnet.
3. Place the yoke (3) on the bonnet in such a way that the ball bearings fit into the recesses of the yoke.
4. Fasten the yoke (3) using the castellated nut (92).
5. **Version with packing flange:**
   a) Place the packing flange (162) over the studs (164) of the valve bonnet (2/21) on the packing follower (8).
   b) Thread the two packing nuts (163) (including disk springs when packing flange is loaded by external spring elements) onto the studs (164) and finger-tighten them. In the version with spring-loaded packing, the packing nuts (163) must be guided through the holes in the packing flange.

   **Version with centrally fastened packing:**

   Continue as described in step 6.
6. Fasten the hanger (83) and warning label (255), if applicable, to the yoke using the screws (82).
7. Position the travel indicator scale (84) on the hanger (83) with the screws (85) according to Table 8.
8. Use a soft-faced hammer or lever press to press the sliding washers (309) with their beveled part first (without using any lubricant) into the recesses of the clamps (301) as far as they will go. Remove any excess material.
9. Apply a thin film of lubricant (114) to the threads of the stem (9) and screws (303).

**NOTICE**

***Impaired functioning due to incorrectly applied lubricant.***

⇨ *Do not apply any lubricant to the threads of the clamps (301) or plug/piston stem.*

10. Position the clamps (301) and stem (9) on the plug stem according to Table 8 and tighten screws (303) and washers (304) by hand.
11. Mount the actuator onto the valve (see Chapter 5.3.2).
12. Thread the stem (9) upwards until the head of the stem rests on the extended actuator stem.
13. Retract the actuator stem to relieve the stem (9).
14. Gradually tighten the screws (303) in a crisscross pattern. Observe the tightening torques specified in Table 6.

**Table 6:** *Tightening torques*

| Screw size | Tightening torque [Nm] |
|---|---|
| M12 | 50 |
| M16 | 121 |

15. Check and ensure the following:
   – There is a nominal clearance of 0.5 to 1 mm between the sliding washers and their contact surface on the yoke on each side (see detailed view Y in Fig. 23).
   – The anti-rotation fixture does not get stuck on the yoke and can move freely in the direction of travel.
16. Extend the actuator stem again and mount the stem connector clamps.

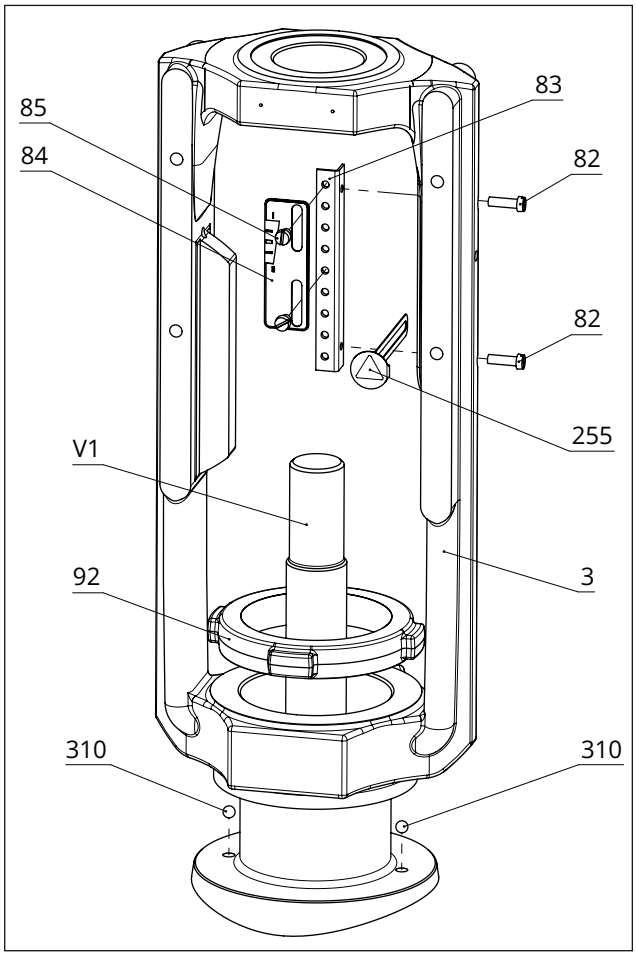


**Fig. 22:** *Overview of yoke assembly with travel indicator scale in the standard version*

| | | | |
|---|---|---|---|
| 3 | Yoke | 92 | Castellated nut |
| 82 | Screws | 255 | Warning label |
| 83 | Hanger | 310 | Ball bearing |
| 84 | Travel indicator scale | V1 | Plug stem |
| 85 | Screws | | |

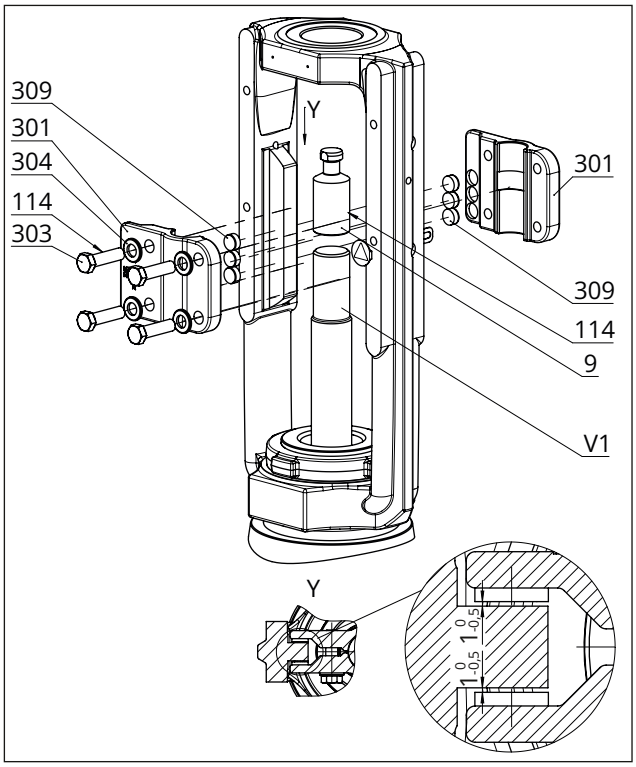


**Fig. 23:** *Overview of anti-rotation fixture assembly in the standard version*

| | | | |
|---|---|---|---|
| 9 | Stem | 304 | Washers |
| 114 | Lubricant Gleitmo 1763 V | 309 | Sliding washers |
| 301 | Clamps | V1 | Plug stem |
| 303 | Screws | | |

### Special version for Series SMS Valves in nominal sizes DN 50 to 100/NPS 2 to 4

See Fig. 24 and Fig. 25

1. **Version with packing flange:**
   a) Gradually unthread the two packing nuts (163) at the hex head in a crisscross pattern.
   b) Lift the two packing nuts (including disk springs when packing flange is loaded by external spring elements) as well as the packing flange (162) upward over the studs (164) off the valve bonnet (2/21).

   **Version with centrally fastened packing:**

   Continue as described in step 2.
2. Fasten the travel indicator scale (84) with hanger (83) and warning label (255), if applicable, to the yoke using the screws (82). While fastening it, position the travel indicator scale (84) on the hanger (83) according to Table 8.
3. Screw tight the holder (302) using the screws (306) and washers (308). Observe the tightening torques specified in Table 7.

4. Place the yoke (3) on the bonnet in such a way that the two holes on the top of the bonnet are aligned with the open sides of the yoke (see Fig. 26).
5. Fasten the yoke (3) using the castellated nut (92).
6. **Version with packing flange:**
   a) Place the packing flange (162) over the studs (164) of the valve bonnet (2/21) on the packing follower (8).
   b) Thread the two packing nuts (163) (including disk springs when packing flange is loaded by external spring elements) onto the studs (164) and finger-tighten them. In the version with spring-loaded packing, the packing nuts (163) must be guided through the holes in the packing flange.

   **Version with centrally fastened packing:**

   Continue as described in step 7.
7. Use a soft-faced hammer or lever press to press the sliding washers (309) (without using any lubricant) into the holes of the clamps (301) as far as they will go. Remove any excess material.
8. Apply a thin film of lubricant (114) to the threads of the stem (9) and screws (303).

**NOTICE**

***Impaired functioning due to incorrectly applied lubricant.***

⇨ *Do not apply any lubricant to the threads of the clamps (301) or plug/piston stem.*

9. Position the clamps (301) and stem (9) on the plug stem according to Table 8 and tighten screws (303) and washers (304) by hand.
10. Mount the actuator onto the valve (see Chapter 5.3.2).
11. Thread the stem (9) upwards until the head of the stem rests on the extended actuator stem.
12. Retract the actuator stem to relieve the stem (9).
13. Gradually tighten the screws (303) in a criss-cross pattern. Observe the tightening torques specified in Table 7.

**Table 7:** *Tightening torques*

| Item | Screw size | Tightening torque [Nm] |
|---|---|---|
| 306 | M10 | 30 |
| 303 | M8 | 15 |

14. Check and ensure the following:
   – There is a nominal clearance of 0.5 to 1 mm between the sliding washers and their contact surface on the yoke on each side (see detailed view Y in Fig. 25).
   – The anti-rotation fixture does not get stuck on the yoke and can move freely in the direction of travel.
15. Extend the actuator stem again and mount the stem connector clamps.

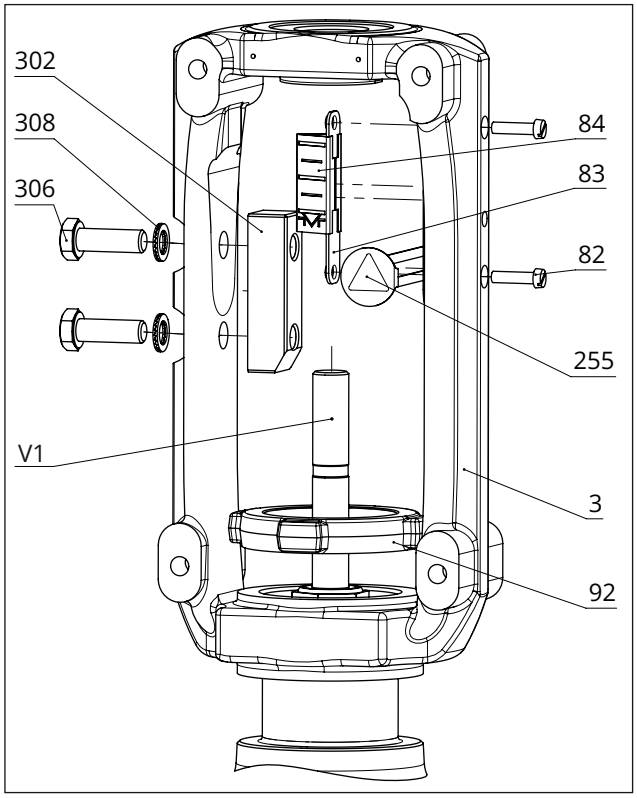


**Fig. 24:** *Overview of yoke assembly with travel indicator scale in the special version*

| | | | |
|---|---|---|---|
| 3 | Yoke | 255 | Warning label |
| 82 | Screws | 302 | Holder |
| 83 | Hanger | 306 | Screws |
| 84 | Travel indicator scale | 308 | Washers |
| 92 | Castellated nut | V1 | Plug stem |

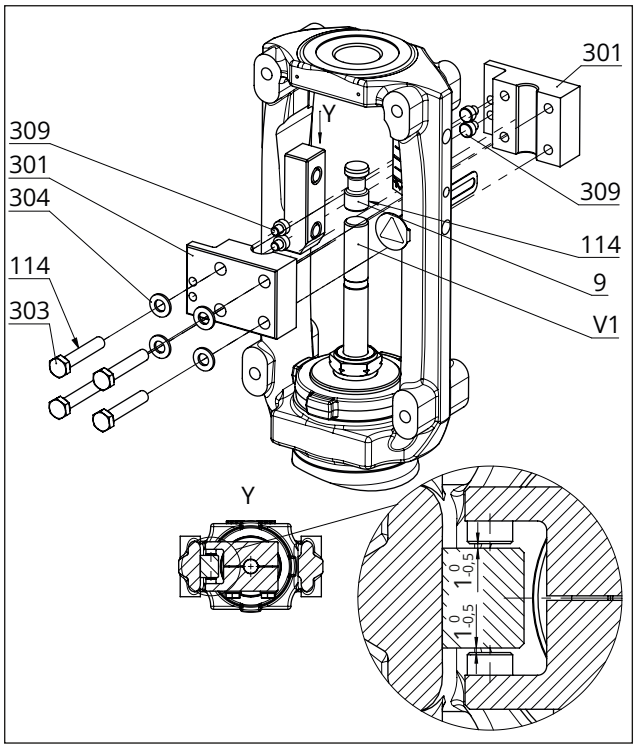


**Fig. 25:** *Overview of anti-rotation fixture assembly in the special version*

| | | | |
|---|---|---|---|
| 9 | Stem | 304 | Washers |
| 114 | Lubricant Gleitmo 1763 V | 309 | Sliding washers |
| 301 | Clamps | V1 | Plug stem |
| 303 | Screws | | |

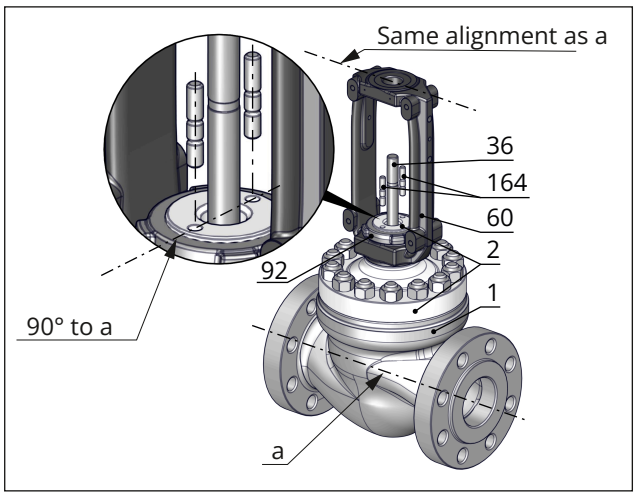


**Fig. 26:** *Alignment of bonnet on the valve body and alignment of yoke on the bonnet*

| | | | |
|---|---|---|---|
| a | Pipeline axis | 60 | Yoke |
| 1 | Valve body | 92 | Castellated nut |
| 2 | Bonnet | 164 | Studs (when a packing flange is used) |
| 36 | Plug/piston stem | | |

**Table 8:** *Mounting dimensions for Types 3271 and 3277 Pneumatic Actuators · See Fig. 27 for dimensional drawing*

| Nominal size | | Actu-ator | Trav-el | Actuator preloading | | Dimension when the valve is closed [mm] | | | | | | | |
|---|---|---|---|---|---|---|---|---|---|---|---|---|---|
| DN | NPS | [cm²] | [mm] | [%] | [mm] | $H_F$ | $H_G$ | $H_I$ | $H_K$ | $H_L$ | $H_N$ | $H_O$ | $H_T$ |
| **DN 50 to 100/NPS 2 to 4 · Special version** | | | | | | | | | | | | | |
| 50 | 2 | 350v2 | 15 | 0 | 0 | 157 | 75 | 238 | 54 | 80.5 | 112 | 42 | 30 |
| | | | 15 | 25 | 3.75 | 161 | 71 | | | | | | |
| | | 355v2 750v2 | 15 | 50 | 15 | 157 | 75 | | | | | | |
| | | | 15 | 75 | 22.5 | 164.5 | 67.5 | | | | | | |
| | | 1000 1400-60 | 15 | 100 | 60 | 182 | 105 | | | | | | |
| 50 to 80 | 2 to 3 | 355v2 750v2 | 19 | 63 | 19 | 160.5 | 71.5 | | | | | | |
| 50 to 100 | 2 to 4 | | 30 | 0 | 0 | 142 | 90 | | | | | | |
| | | | 30 | 25 | 7.5 | 149.5 | 82.5 | | | | | | |
| | | | 38 | 0 | 0 | 142 | 90 | | | | | | |
| | | 1000 1400-60 | 30 | 75 | 45 | 167 | 120 | | | | | | |
| | | | 38 | 62.5 | 37.5 | 159.5 | 127.5 | | | | | | |
| | | 1400-120 | 30 | 75 | 90 | 277 | 195 | | | | | | |
| | | | 38 | 69 | 82.5 | 269.5 | 202.5 | | | | | | |
| | | 2800 | 30 | 100 | 120 | 277 | 195 | | | | | | |
| | | | 38 | 94 | 112.5 | 269.5 | 202.5 | | | | | | |
| **Nominal size** | | **Actu-ator** | **Trav-el** | **Actuator preloading** | | **Dimension when the valve is closed [mm]** | | | | | | | |
| **DN** | **NPS** | **[cm²]** | **[mm]** | **[%]** | **[mm]** | $H_F$ | $H_G$ | $H_I$ | $H_K$ | $H_L$ | $H_N$ | $H_O$ | $H_T$ |
| **DN 150/NPS 6 · Standard version** | | | | | | | | | | | | | |
| 150 | 6 | 355v2 750v2 | 38 | – | – | 326 | 90 | 277 | 87 | 133 | 190 | 70 | 120 |
| | | 1000 1400-60 | 38 | 62.5 | 37.5 | 288.5 | 127.5 | | | | | | 88 |
| | | | 60 | – | – | 251 | 165 | | | | | | 58 |
| | | | 60 | 25 | 15 | 266 | 150 | | | | | | 58 |
| | | | 75 | – | – | 251 | 165 | | | | | | 58 |
| | | 1400-120 | 38 | 69 | 82.5 | 298.5 | 202.5 | | | | | | 105 |
| | | | 60 | – | – | 393 | 255 | | | 148 | | | FE[2)]=175 |
| | | | 60 | 50 | 60 | 276 | 225 | | | 133 | | | FA[1)]=75 |
| | | | 75 | 37.5 | 45 | 261 | 240 | | | | | | FA[1)]=75 |
| | | 2800 | 38 | 94 | 112.5 | 298.5 | 202.5 | | | | | | 105 |
| | | | 60 | – | – | 393 | 255 | | | 148 | | | FE[2)]=175 |
| | | | 60 | 75 | 90 | 276 | 225 | | | 133 | | | FA[1)]=75 |
| | | | 75 | 62.5 | 75 | 261 | 240 | | | | | | FA[1)]=75 |

1) FA = Actuator stem extends (fail-close)

2) FE = Actuator stem retracts (fail-open)

| Nominal size | | Actuator | Travel | Actuator preloading | | Dimension when the valve is closed [mm] | | | | | | | |
|---|---|---|---|---|---|---|---|---|---|---|---|---|---|
| DN | NPS | [cm²] | [mm] | [%] | [mm] | $H_F$ | $H_G$ | $H_I$ | $H_K$ | $H_L$ | $H_N$ | $H_O$ | $H_T$ |
| **DN 200/NPS 8 · Standard version** | | | | | | | | | | | | | |
| 200 | 8 | 1000 | 60 | – | – | 251 | 165 | 280 | 87 | 137 | 190 | 65 | 55 |
| | | 1400-60 | 60 | 25 | 15 | 266 | 150 | | | | | | 55 |
| | | 1400-120 | 60 | – | – | 393 | 255 | | | 146 | | | 185 |
| | | | 60 | 50 | 60 | 276 | 225 | | | 133 | | | 76 |
| | | | 90 | 25 | 30 | 393 | 255 | | | | | | 76 |
| | | 2800 | 60 | – | – | 393 | 255 | | | 146 | | | 185 |
| | | | 60 | 75 | 90 | 276 | 225 | | | 133 | | | 76 |
| | | | 90 | 50 | 60 | 393 | 255 | | | | | | 76 |

| Nominal size | | Actuator | Travel | Actuator preloading | | Dimension when the valve is closed [mm] | | | | | | | |
|---|---|---|---|---|---|---|---|---|---|---|---|---|---|
| DN | NPS | [cm²] | [mm] | [%] | [mm] | $H_F$ | $H_G$ | $H_I$ | $H_K$ | $H_L$ | $H_N$ | $H_O$ | $H_T$ |
| **DN 250/NPS 10 · Standard version** | | | | | | | | | | | | | |
| 250 | 10 | 1000 | 60 | – | – | 336 | 165 | 322 | 87 | 185 | 235 | 110 | 91 |
| | | 1400-60 | 60 | 25 | 15 | 351 | 150 | | | | | | 91 |
| | | 1400-120 | 60 | – | – | 393 | 255 | | | | | | 145 |
| | | | 60 | 50 | 60 | 423 | 225 | | | | | | 175 |
| | | 2800 | 60 | – | – | 393 | 255 | | | | | | 145 |
| | | | 60 | 75 | 90 | 423 | 225 | | | | | | 175 |

| Nominal size | | Actuator | Travel | Actuator preloading | | Dimension when the valve is closed [mm] | | | | | | | |
|---|---|---|---|---|---|---|---|---|---|---|---|---|---|
| DN | NPS | [cm²] | [mm] | [%] | [mm] | $H_F$ | $H_G$ | $H_I$ | $H_K$ | $H_L$ | $H_N$ | $H_O$ | $H_T$ |
| **DN 250 to 300/NPS 10 to 12 · Standard version** | | | | | | | | | | | | | |
| 250 to 300 | 10 to 12 | 1400-120 | 90 | 25 | 30 | 393 | 255 | 322 | 87 | 185 | 235 | 110 | 175 |
| | | | 120 | – | – | 363 | 285 | | | | | | FA[1)]=115<br>FE[2)]=86 |
| | | 2800 | 90 | 50 | 60 | 393 | 255 | | | | | | 175 |
| | | | 120 | – | – | 333 | 315 | | | | | | FE[2)]=86 |
| | | | 120 | 25 | 30 | 363 | 285 | | | | | | 115 |

1) FA = Actuator stem extends (fail-close)

2) FE = Actuator stem retracts (fail-open)

| Nominal size | | Actuator | Travel | Actuator preloading | | Dimension when the valve is closed [mm] | | | | | | | |
|---|---|---|---|---|---|---|---|---|---|---|---|---|---|
| DN | NPS | [cm²] | [mm] | [%] | [mm] | $H_F$ | $H_G$ | $H_I$ | $H_K$ | $H_L$ | $H_N$ | $H_O$ | $H_T$ |
| **DN 300/NPS 12 · Standard version** | | | | | | | | | | | | | |
| 300 | 12 | 2800 | 150 | – | – | 333 | 315 | 322 | 87 | 185 | 235 | 110 | FE[2)]=86 |

2) FE = Actuator stem retracts (fail-open)

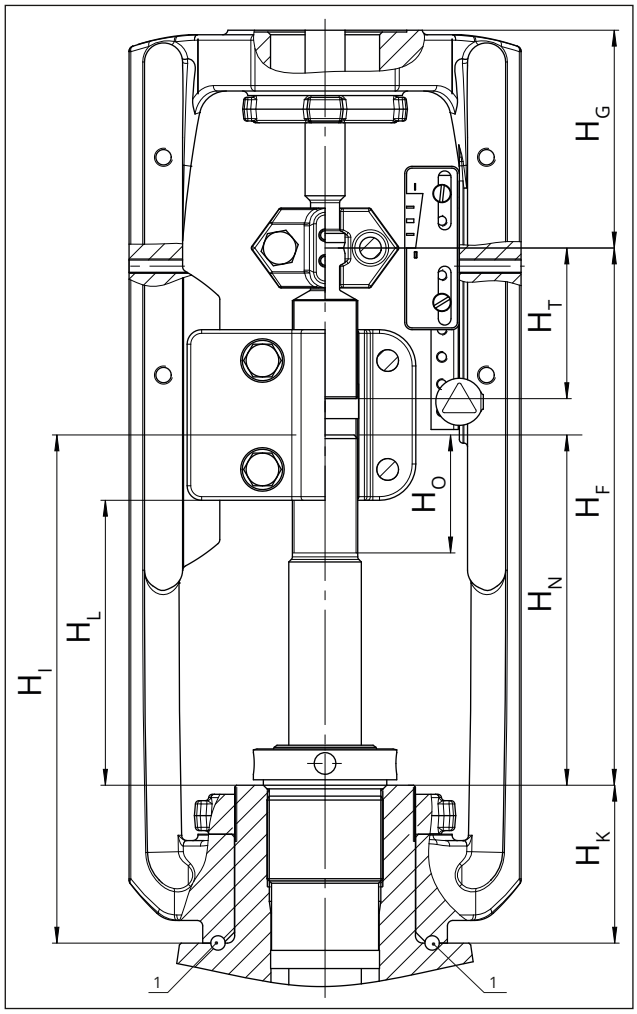


**Fig. 27:** *Dimensional drawing with mounting dimensions for Types 3271 and 3277 Pneumatic Actuators*

1 Ball bearings (standard version only)

## 5.3.2 Mounting the actuator onto the valve

**⚠ WARNING**

***Risk of personal injury due to preloaded springs in pneumatic actuators.***

*Valves in combination with pneumatic actuators with preloaded springs are under tension. These control valves with SAMSON pneumatic linear actuators (e.g. Type 3271/3277 or Type 3371) can be identified by the long bolts protruding from the bottom of the actuator.*

⇨ *Before starting any work on the actuator, which requires the actuator to be opened, or when the actuator stem has become blocked, relieve the compression from the preloaded springs (see associated actuator documentation).*

**⚠ WARNING**

***Risk of personal injury due to incorrect removal of the anti-rotation fixture under tension.***

*Once the actuator has been mounted on the valve and the assembly is ready for use, the clamps (301) of the anti-rotation fixture on the plug stem are under tension.*

⇨ *Follow the instructions in this document during mounting or removal.*

⇨ *Do not loosen the screws (303) of the anti-rotation fixture while the force generated by the supply air and/or the actuator springs is transmitted to the actuator stem and the stem (9).*

⇨ *Remove the actuator from the valve or otherwise ensure that it cannot transmit any forces to the actuator stem before removing the anti-rotation fixture from the plug stem.*

Depending on the version, SAMSON control valves are either delivered with the actuator already mounted on the valve or the valve and actuator are delivered separately. When delivered separately, the valve and actuator must be assembled together on site.

**i *Note***

*In contrast to unsymmetrical plugs (e.g. V-port plug or perforated plug), the parabolic plug does not need to be aligned in any special way.*

### Versions with perforated plug

Only one hole is located near the seal facing of perforated plugs with equal percentage characteristic. Depending on the nominal size, the hole pattern varies and is partly unsymmetrical. The process medium in the valve flows through the holes as soon as the plug is lifted out of the seat. To achieve the best flow conditions inside the valve, the perforated plug must always be installed with the hole that releases the flow first when the valve opens facing toward the valve outlet (see Fig. 28).

⇨ Before mounting the actuator, check the hole pattern of the perforated plug and determine which hole is the closest to the seal facing. This hole is the first hole to release the flow when the plug is lifted out of the seat.

⇨ On mounting the actuator, make sure that the hole uncovered first faces toward the valve outlet.

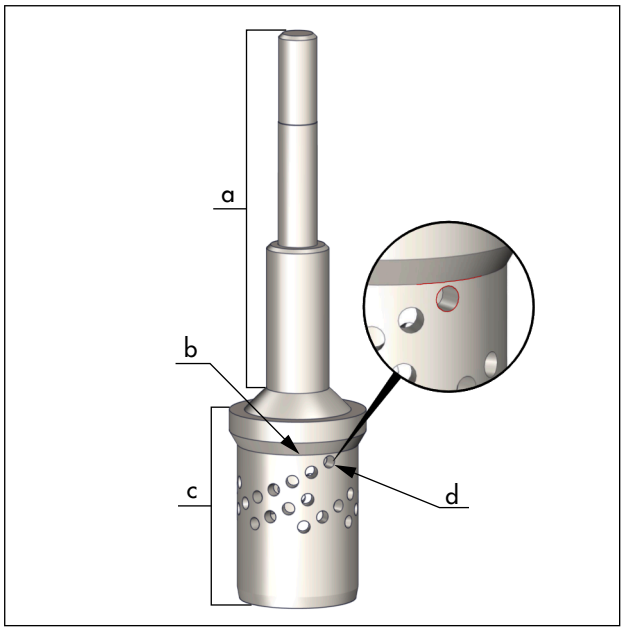


**Fig. 28:** *Perforated plug (example shown)*

a Plug stem
b Seal facing
c Perforated plug
d Hole closest to the seal facing of the plug

### Mounting the actuator

⇨ To mount the actuator, proceed as described in the associated actuator documentation.

### Aligning the travel indicator scale

After mounting the actuator, the travel indicator scale must be aligned. To do so, align '0' on the travel indicator scale with the tip of the stem connector clamp (see Fig. 27).

1. Move the valve to the closed position.
2. Loosen the screws on the travel indicator scale.
3. Align the travel indicator scale.
4. Fix the travel indicator scale into place by tightening the screws.

## 5.4 Installing the valve into the pipeline

**NOTICE**

***Risk of valve damage due to work being carried out by personnel not qualified for such tasks.***

*The plant operator or specialist company performing the welding is responsible for the selection of the welding procedure and the actual welding operations on the valve. This also applies to any required heat treatment to be performed on the valve.*

⇨ *Only allow qualified welding personnel to carry out welding operations.*

⇨ *Before welding painted valves into the pipeline and/or subject them to heat in any way, observe the temperature resistance of the paint coating system. The number of the coating system used can be found in the order documentation. The temperature resistance of all of our coating systems is specified in the Brochure ▶ WA 268.*

**NOTICE**

***Premature wear and leakage due to insufficient support or suspension.***

⇨ *Support or suspend the valve sufficiently at suitable points.*

### Version with flanges

1. Close the shut-off valves in the pipeline at the inlet and outlet of the plant section while the valve is being installed.
2. Prepare the relevant section of the pipeline for installing the valve.
3. Remove the protective caps from the valve ports before installing the valve.
4. Lift the valve using suitable lifting equipment to the site of installation (see Chapter 4.3.2). Observe the flow direction through the valve. The arrow on the valve indicates the direction of flow.
5. Make sure that the correct flange gaskets are used.
6. Bolt the pipe to the valve free of stress.
7. Attach a support or suspension on the valve, if necessary.

### Version with welding ends

1. Close the shut-off valves in the pipeline at the inlet and outlet of the plant section while the valve is being installed.
2. Prepare the relevant section of the pipeline for installing the valve.
3. Remove the protective caps from the valve ports before installing the valve.
4. Lift the valve using suitable lifting equipment to the site of installation (see Chapter 4.3.2). Observe the flow direction through the valve. The arrow on the valve indicates the direction of flow.

5. Completely retract the actuator stem to protect the plug from sparks during welding.
6. Weld the valve free of stress into the pipeline.
7. Attach a support or suspension on the valve, if necessary.

## 5.5 Testing the installed valve

**⚠ DANGER**

***Risk of bursting due to incorrect opening of pressurized equipment or components.***

*Control valves and pipelines are pressure equipment that may burst when handled incorrectly. Flying projectile fragments or the release of process medium under pressure can cause serious injury or even death. Before starting any work on pressure-bearing or pressure-retaining parts belonging to the valve assembly:*

⇨ *Depressurize all plant sections affected and the valve (including the actuator). Release any stored energy.*

⇨ *Drain the process medium from the plant sections affected as well as from the valve.*

**⚠ WARNING**

***Risk of personal injury due to pressurized components and as a result of process medium being discharged.***

*Valves with a bellows seal have a test connection at the top on the intermediate piece.*

⇨ *Do not loosen the screw on the test connection while the valve is pressurized.*

**⚠ WARNING**

***Risk of hearing loss or deafness due to loud noise.***

*Noise emission (e.g. cavitation or flashing) may occur during operation caused by the process medium and the operating conditions. Additionally, a loud noise may briefly occur through the sudden venting of the pneumatic actuator or pneumatic valve accessories not fitted with noise-reducing elements. Both can damage hearing.*

⇨ *Follow the standard operating procedures provided by the plant operator.*

*In the event of a potential risk:*

⇨ *Wear hearing protection when working near the valve.*

**⚠ WARNING**

***Crush hazard arising from moving parts.***

*The control valve contains moving parts (actuator stem and plug/piston stem), which can injure hands or fingers if inserted into the valve.*

⇨ *Do not insert hands or finger into the yoke while the air supply is connected to the actuator.*

⇨ *Before working on the pneumatic control valve, disconnect and lock the pneumatic air supply as well as the control signal.*

⇨ *Do not impede the movement of the actuator stem and plug/piston stem by inserting objects into the yoke.*

⇨ *Before unblocking the actuator stem and plug/piston stem after they have become blocked (e.g. due to seizing up after remaining in the same position for a long time), release any stored energy in the actuator (e.g. spring compression). See associated actuator documentation.*

**⚠ WARNING**

***Risk of personal injury due to exhaust air being vented or compressed air escaping from pneumatically operated components.***

*When the valve is operated with a pneumatic actuator or pneumatic valve accessories, exhaust air is vented from the actuator, for example, while the valve is operating and when the valve opens or closes.*

⇨ *Wear eye protection when working in close proximity to pneumatic fittings and in the danger zone of the vent openings.*

**⚠ WARNING**

***Risk of personal injury due to preloaded springs in pneumatic actuators.***

*Valves in combination with pneumatic actuators with preloaded springs are under tension. These control valves with SAMSON pneumatic linear actuators (e.g. Type 3271/3277 or Type 3371) can be identified by the long bolts protruding from the bottom of the actuator.*

⇨ *Before starting any work on the actuator, which requires the actuator to be opened, or when the actuator stem has become blocked, relieve the compression from the preloaded springs (see associated actuator documentation).*

To test the valve functioning before start-up or putting back the valve into operation, perform the following tests:

### 5.5.1 Leak test

The plant operator is responsible for performing the leak test and selecting the test method. The leak test must comply with the requirements of the national and international standards that apply at the site of installation.

**Tip**

*Our after-sales service can support you to plan and perform a leak test for your plant.*

1. Close the valve.
2. **Packing centrally fastened with threaded bushing:** Tighten threaded bushing (8) gradually applying the specified tightening torque.

   **Version with packing flange:** Gradually tighten the two packing nuts (163) on the packing flange (162) at the hex head in a crisscross pattern until the specified tightening torque is reached.
3. Slowly apply the test medium to the inlet space upstream of the valve. A sudden surge in pressure and resulting high flow velocities can damage the valve.
4. Open the valve.
5. Apply the required test pressure.
6. Check the valve for leakage to the atmosphere.
7. Depressurize the pipeline section and valve.
8. Rework any parts that leak (see section 'Adjusting the packing') and repeat the leak test.

#### Adjusting the packing

The sealing elements of the adjustable packing are compressed between the valve body and plug stem by applying a specified tightening torque. If the packing leaks, the threaded bushing or packing flange can be repeatedly tightened further by the specified tightening torque during the valve's service life until the sealing elements must be replaced.

Live-loaded packings are loaded by internal or external springs. Pre-loaded springs maintain a constant load on the sealing elements, which is automatically adjusted, even as the sealing elements wear down over time until they must be replaced. Once the specified tightening torque has been applied to the live-loaded packing during first start-up, additional tightening of the packing set is only permitted if the packing does not seal properly directly after tightening with the specified torque.

A label on the yoke indicates whether an adjustable packing is installed (see Chapter 2).

**NOTICE**

***Impaired valve functioning due to increased friction as a result of the threaded bushing or packing flange being tightened too far.***

⇨ *Make sure that the plug/piston stem can still move smoothly after the threaded bushing or the packing nuts on the packing flange have been tightened.*

#### Packing centrally fastened with threaded bushing

See Fig. 29

1. Continue to gradually tighten the threaded bushing (8) (⅛ turn at a time).
2. Open and close the valve several times.
3. Check the valve for leakage to the atmosphere.
4. Repeat steps 1 and 2 until the packing completely seals the valve or (depending on the packing type) no further than the point at which the threaded bushing rests on the valve bonnet.

⇨ If the adjustable packing does not seal properly, contact our after-sales service.

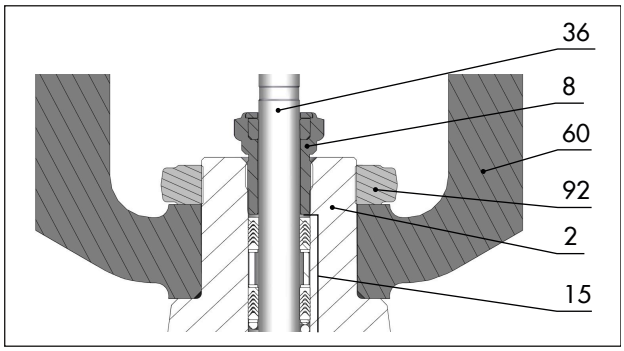


**Fig. 29:** *Packing with threaded bushing (centrally fastened) (example shown)*

| | | | |
|---|---|---|---|
| 2 | Valve bonnet | 36 | Plug or piston stem |
| 8 | Threaded bushing | 60 | Yoke |
| 15 | Packing set | 92 | Castellated nut |

**Packing with packing flange**

See Fig. 30 and Fig. 31

1. Gradually tighten the two packing nuts (163) on the packing flange (162) at the hex head in a crisscross pattern (⅛ turn at a time).
2. Open and close the valve several times.
3. Check the valve for leakage to the atmosphere.
4. Repeat steps 1 and 2 until the packing completely seals the valve.

⇨ If the adjustable packing does not seal properly, contact our after-sales service.

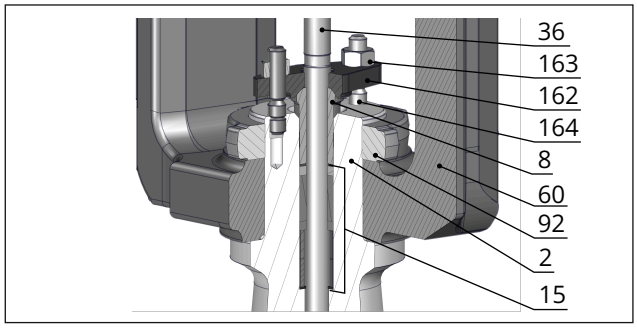


**Fig. 30:** *Version with packing flange (without external spring elements)*

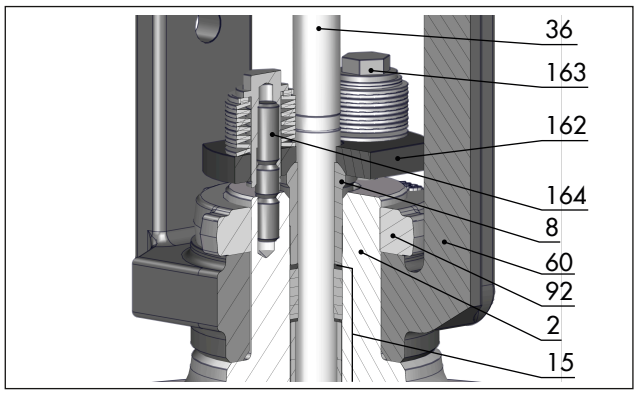


**Fig. 31:** *Version with packing flange loaded by external spring elements*

**Legend for Fig. 31** and Fig. 30

| | |
|---|---|
| 2 | Valve bonnet |
| 8 | Packing follower |
| 15 | Packing set |
| 36 | Plug/piston stem |
| 60 | Yoke |
| 92 | Castellated nut |
| 162 | Packing flange |
| 163 | Packing nut (including disk spring with packing flange loaded by external spring elements) |
| 164 | Stud |

## 5.5.2 Travel motion

The movement of the actuator stem must be linear and smooth.

⇨ Apply the maximum and minimum control signals to check the end positions of the valve while observing the movement of the actuator stem.

⇨ Check the travel reading at the travel indicator scale.

## 5.5.3 Fail-safe position

The fail-safe position of a valve can only be checked when the valve is combined with an actuator that moves to the fail-safe position upon air supply or control signal failure.

**Fail-safe position with pneumatic actuators with integrated springs**

⇨ Shut off the signal pressure line.

⇨ Check whether the valve moves to the fail-safe position (see Chapter 3.1).

## 5.5.4 Pressure test

The plant operator is responsible for performing the pressure test.

***Tip***

*Our after-sales service can support you to plan and perform a pressure test for your plant.*

During the pressure test, make sure the following conditions are met:

– Retract the plug/piston to open the valve.
– Observe the maximum permissible pressure for both the valve and plant.

# 6 Start-up

The work described in this chapter is to be performed only by personnel appropriately qualified to carry out such tasks.

**⚠ WARNING**

***Risk of burn injuries due to hot or cold components and pipelines.***

*Depending on the process medium, valve components and pipelines may get very hot or cold during operation and cause burn injuries.*

⇨ *Follow the standard operating procedures provided by the plant operator.*

*In the event of a potential risk:*

⇨ *Allow components and pipelines to cool down or warm up to the ambient temperature.*

⇨ *Wear protective clothing and safety gloves.*

**⚠ WARNING**

***Risk of personal injury due to pressurized components and as a result of process medium being discharged.***

*Valves with a bellows seal have a test connection at the top on the intermediate piece.*

⇨ *Do not loosen the screw on the test connection while the valve is pressurized.*

**⚠ WARNING**

***Risk of hearing loss or deafness due to loud noise.***

*Noise emission (e.g. cavitation or flashing) may occur during operation caused by the process medium and the operating conditions. Additionally, a loud noise may briefly occur through the sudden venting of the pneumatic actuator or pneumatic valve accessories not fitted with noise-reducing elements. Both can damage hearing.*

⇨ *Follow the standard operating procedures provided by the plant operator.*

*In the event of a potential risk:*

⇨ *Wear hearing protection when working near the valve.*

**⚠ WARNING**

***Crush hazard arising from moving parts.***

*The control valve contains moving parts (actuator stem and plug/piston stem), which can injure hands or fingers if inserted into the valve.*

⇨ *Do not insert hands or finger into the yoke while the air supply is connected to the actuator.*

⇨ *Before working on the pneumatic control valve, disconnect and lock the pneumatic air supply as well as the control signal.*

⇨ *Do not impede the movement of the actuator stem and plug/piston stem by inserting objects into the yoke.*

⇨ *Before unblocking the actuator stem and plug/piston stem after they have become blocked (e.g. due to seizing up after remaining in the same position for a long time), release any stored energy in the actuator (e.g. spring compression). See associated actuator documentation.*

**⚠ WARNING**

***Risk of personal injury due to exhaust air being vented or compressed air escaping from pneumatically operated components.***

*When the valve is operated with a pneumatic actuator or pneumatic valve accessories, exhaust air is vented from the actuator, for example, while the valve is operating and when the valve opens or closes.*

⇨ *Wear eye protection when working in close proximity to pneumatic fittings and in the danger zone of the vent openings.*

Before start-up or putting the device back into service, make sure the following conditions are met:

- The control valve is properly installed into the pipeline (see Chapter 5).
- The leak and function tests have been completed successfully (see Chapter 5.5).
- The prevailing conditions in the plant section affected meet the valve sizing requirements (see section 'Intended use' in Chapter 1).

### Start-up/putting the device back into operation

1. Allow the valve to cool down or warm up to reach ambient temperature before start-up when the ambient temperature and process medium temperature differ greatly or the medium properties require such a measure.
2. Slowly open the shut-off valves in the pipeline. Slowly opening these valves prevents a sudden surge in pressure and high flow velocities which may damage the valve.
3. Check the valve to ensure it functions properly.

# 7 Operation

Immediately after completing start-up or putting the valve back into operation, the valve is ready for use.

**⚠ WARNING**

***Risk of burn injuries due to hot or cold components and pipelines.***

*Depending on the process medium, valve components and pipelines may get very hot or cold during operation and cause burn injuries.*

⇨ *Follow the standard operating procedures provided by the plant operator.*

*In the event of a potential risk:*

⇨ *Allow components and pipelines to cool down or warm up to the ambient temperature.*

⇨ *Wear protective clothing and safety gloves.*

**⚠ WARNING**

***Risk of personal injury due to pressurized components and as a result of process medium being discharged.***

*Valves with a bellows seal have a test connection at the top on the intermediate piece.*

⇨ *Do not loosen the screw on the test connection while the valve is pressurized.*

**⚠ WARNING**

***Risk of hearing loss or deafness due to loud noise.***

*Noise emission (e.g. cavitation or flashing) may occur during operation caused by the process medium and the operating conditions. Additionally, a loud noise may briefly occur through the sudden venting of the pneumatic actuator or pneumatic valve accessories not fitted with noise-reducing elements. Both can damage hearing.*

⇨ *Follow the standard operating procedures provided by the plant operator.*

*In the event of a potential risk:*

⇨ *Wear hearing protection when working near the valve.*

**⚠ WARNING**

***Crush hazard arising from moving parts.***

*The control valve contains moving parts (actuator stem and plug/piston stem), which can injure hands or fingers if inserted into the valve.*

⇨ *Do not insert hands or finger into the yoke while the air supply is connected to the actuator.*

⇨ *Before working on the pneumatic control valve, disconnect and lock the pneumatic air supply as well as the control signal.*

⇨ *Do not impede the movement of the actuator stem and plug/piston stem by inserting objects into the yoke.*

⇨ *Before unblocking the actuator stem and plug/piston stem after they have become blocked (e.g. due to seizing up after remaining in the same position for a long time), release any stored energy in the actuator (e.g. spring compression). See associated actuator documentation.*

**⚠ WARNING**

***Risk of personal injury due to exhaust air being vented or compressed air escaping from pneumatically operated components.***

*When the valve is operated with a pneumatic actuator or pneumatic valve accessories, exhaust air is vented from the actuator, for example, while the valve is operating and when the valve opens or closes.*

⇨ *Wear eye protection when working in close proximity to pneumatic fittings and in the danger zone of the vent openings.*

## 7.1 Normal operation

The handwheel of valves with actuators fitted with a handwheel must be in the neutral position during normal operation.

## 7.2 Manual operation

Valves with actuators fitted with a handwheel can be manually closed or opened in the event of failure of the auxiliary energy supply.

# 8 Malfunctions

**Read hazard statements, warnings and caution notes in Chapter 1.**

## 8.1 Troubleshooting

| Malfunction | Possible reasons | Recommended action |
|---|---|---|
| Actuator and plug/piston stem does not move on demand. | Actuator is blocked. | Put the control valve out of operation (see Chapter 10) and remove the blockage.<br>**WARNING!** A blocked actuator or plug or piston stem (e.g. due to seizing up after remaining in the same position for a long time) can suddenly start to move uncontrollably. Injury to hands or fingers is possible if they are inserted into the actuator or valve.<br>Before trying to unblock the actuator stem or plug/piston stem, disconnect and lock the air supply as well as the control signal. Before unblocking the actuator, release any stored energy in the actuator (e.g. spring compression). See associated actuator documentation. |
| | Pneumatic actuators: Diaphragm in the actuator defective | See associated actuator documentation. |
| | Pneumatic actuator: Signal pressure too low | Check the signal pressure.<br>Check the signal pressure line for leakage. |
| Jolting movement of the actuator and plug/piston stem | Version with adjustable packing [1]: Packing tightened too far | Tighten the packing correctly (see section 'Adjusting the packing' in Chapter 5.5.1). |
| Actuator and plug/piston stem do not stroke through the full range. | Pneumatic actuator: Signal pressure too low | Check the signal pressure.<br>Check the signal pressure line for leakage. |
| | Travel stop active | See associated actuator documentation. |
| | Incorrect setting of valve accessories | Check the settings of the valve accessories. |
| Increased flow through closed valve (seat leakage) | Dirt or other foreign particles deposited between the seat and plug. | Shut off the section of the pipeline and flush the valve. |
| | Valve trim is worn out. | Replace valve trim (see Chapter 9) or contact our after-sales service. |
| The valve leaks to the atmosphere (fugitive emissions). | Defective packing | Replace packing (see Chapter 9) or contact our after-sales service. |
| | Version with adjustable packing [1]: Packing not tightened correctly | Adjust the packing (see section 'Adjusting the packing' in Chapter 5.5.1). Contact our after-sales service when it continues to leak. |
| | Version with bellows seal: the metal bellows is defective | Contact our after-sales service. |
| | Flanged joint loose or body gaskets worn out | Check the flanged joint.<br>Replace gaskets at the flanged joint (see Chapter 9) or contact our after-sales service. |

[1] See Chapter 2

**i** ***Note***

*Contact SAMSON's After-sales Service for malfunctions not listed in the table.*

## 8.2 Emergency action

Plant operators are responsible for emergency action to be taken in the plant.

In the event of a valve malfunction:

1. Close the shut-off valves upstream and downstream of the control valve to stop the process medium from flowing through the valve.
2. Perform troubleshooting (see Chapter 8.1).
3. Rectify those malfunctions that can be remedied following the information given in this document. Contact our after-sales service in all other cases.

**Putting the device back into operation after a malfunction**

See Chapter 6.

# 9 Servicing and conversion

The work described in this chapter is to be performed only by personnel appropriately qualified to carry out such tasks.

Only perform service or conversion work on valves which meet all the following conditions:

- The nominal size is ≤NPS 4.
- The valve does not have a bellows seal.
- The valve does not have a flow divider.
- The valve does not have a balanced plug.

⇨ Contact our after-sales service for service or conversion work on all other valve versions.

The following documents are also required for servicing the control valve:

- Mounting and operating instructions for the mounted actuator, for example:
  - ▶ EB 8310-X for Type 3271 and Type 3277 Pneumatic Actuators

**⚠ DANGER**

***Risk of bursting due to incorrect opening of pressurized equipment or components.***

*Control valves and pipelines are pressure equipment that may burst when handled incorrectly. Flying projectile fragments or the release of process medium under pressure can cause serious injury or even death. Before starting any work on pressure-bearing or pressure-retaining parts belonging to the valve assembly:*

⇨ *Depressurize all plant sections affected and the valve (including the actuator). Release any stored energy.*

⇨ *Drain the process medium from the plant sections affected as well as from the valve.*

**⚠ WARNING**

***Risk of burn injuries due to hot or cold components and pipelines.***

*Depending on the process medium, valve components and pipelines may get very hot or cold during operation and cause burn injuries.*

⇨ *Follow the standard operating procedures provided by the plant operator.*

*In the event of a potential risk:*

⇨ *Allow components and pipelines to cool down or warm up to the ambient temperature.*

⇨ *Wear protective clothing and safety gloves.*

**⚠ WARNING**

***Risk of personal injury due to pressurized components and as a result of process medium being discharged.***

*Valves with a bellows seal have a test connection at the top on the intermediate piece.*

⇨ *Do not loosen the screw on the test connection while the valve is pressurized.*

**⚠ WARNING**

***Risk of hearing loss or deafness due to loud noise.***

*Noise emission (e.g. cavitation or flashing) may occur during operation caused by the process medium and the operating conditions. Additionally, a loud noise may briefly occur through the sudden venting of the pneumatic actuator or pneumatic valve accessories not fitted with noise-reducing elements. Both can damage hearing.*

⇨ *Follow the standard operating procedures provided by the plant operator.*

*In the event of a potential risk:*

⇨ *Wear hearing protection when working near the valve.*

**⚠ WARNING**

***Crush hazard arising from moving parts.***

*The control valve contains moving parts (actuator stem and plug/piston stem), which can injure hands or fingers if inserted into the valve.*

⇨ *Do not insert hands or finger into the yoke while the air supply is connected to the actuator.*

⇨ *Before working on the pneumatic control valve, disconnect and lock the pneumatic air supply as well as the control signal.*

⇨ *Do not impede the movement of the actuator stem and plug/piston stem by inserting objects into the yoke.*

⇨ *Before unblocking the actuator stem and plug/piston stem after they have become blocked (e.g. due to seizing up after remaining in the same position for a long time), release any stored energy in the actuator (e.g. spring compression). See associated actuator documentation.*

**⚠ WARNING**

***Risk of personal injury due to exhaust air being vented or compressed air escaping from pneumatically operated components.***

*When the valve is operated with a pneumatic actuator or pneumatic valve accessories, exhaust air is vented from the actuator, for example, while the valve is operating and when the valve opens or closes.*

⇨ *Wear eye protection when working in close proximity to pneumatic fittings and in the danger zone of the vent openings.*

**⚠ WARNING**

***Risk of personal injury due to preloaded springs in pneumatic actuators.***

*Valves in combination with pneumatic actuators with preloaded springs are under tension. These control valves with SAMSON pneumatic linear actuators (e.g. Type 3271/3277 or Type 3371) can be identified by the long bolts protruding from the bottom of the actuator.*

⇨ *Before starting any work on the actuator, which requires the actuator to be opened, or when the actuator stem has become blocked, relieve the compression from the preloaded springs (see associated actuator documentation).*

**⚠ WARNING**

***Risk of personal injury due to residual process medium in the valve.***

*While working on the valve, residual medium can flow out of the valve and, depending on its properties, cause personal injury, e.g. (chemical) burns.*

⇨ *Follow the standard operating procedures provided by the plant operator.*

*In the event of a potential risk:*

⇨ *If possible, drain the process medium from the plant sections affected and from the valve.*

⇨ *Wear protective clothing, safety gloves, respiratory protection and eye protection.*

**❗ NOTICE**

***Risk of leakage and valve damage due to over- or under-torquing.***

*Observe the specified torques when tightening control valve components. Over-torquing leads to parts wearing out more quickly. Under-torquing may cause leakage.*

⇨ *Observe tightening torques.*

**❗ NOTICE**

***Risk of valve damage due to the use of unsuitable tools.***

*Certain tools are required to work on the valve.*

⇨ *Only use tools approved by SAMSON.*

**❗ NOTICE**

***Risk of valve damage due to the use of unsuitable lubricants.***

*The lubricants to be used depend on the valve material. Unsuitable lubricants may corrode and damage surfaces.*

⇨ *Only use lubricants approved by SAMSON.*

**i Note**

*The control valve was checked by SAMSON before delivery.*

- *Certain test results certified by SAMSON lose their validity when the valve is opened. Such testing includes seat leakage and leak tests.*
- *The product warranty becomes void if service or repair work not described in these instructions is performed without prior agreement by SAMSON's After-sales Service.*
- *Only use original spare parts by SAMSON, which comply with the original specifications.*

## 9.1 Periodic testing

Depending on the operating conditions, check the control valve at certain intervals to prevent possi-

ble failure before it can occur. Plant operators are responsible for drawing up an inspection and test plan.

**Tip**

*Our after-sales service can support you in drawing up an inspection and test plan for your plant.*

SAMSON recommends the following inspections and tests:

| Inspection and testing | Recommended action to be taken in the event of a negative result |
|---|---|
| Check the markings, labels and nameplates on the control valve for their readability and completeness. | Immediately renew damaged, missing or incorrect nameplates or labels. |
| | Clean any inscriptions that are covered with dirt and are illegible. |
| External leakage [1]: Inspect the control valve at the possible points of leakage to ensure there is no leakage (see following image).<br><br>Version with bellows seal:<br>**WARNING!** Risk of personal injury due to pressurized components and as a result of process medium being discharged.<br>Do not loosen the screw on the test connection while the valve is pressurized. | Check the bolted joint (tightening torque). |
| | Replace the gaskets at the flanged joints.<br>To do so, put the control valve out of operation (see Chapter 10). |
| | Version with adjustable packing [2]: Adjust the packing (see section 'Adjusting the packing' in Chapter 5.5.1) or replace the packing (see Chapter 9.4). |
| | If the bellows seal is defective, put the control valve out of operation (see Chapter 10). Contact our after-sales service to repair the bellows seal (see Chapter 12). |
| Seat leakage [1] (see following image) (without testing to check that the leakage class requirements are met) | Shut off the section of the pipeline and flush the valve to remove any dirt and/or deposited foreign particles between the seat and plug or cage and piston. |
| | Renew trim, if necessary (see Chapter 9.4).<br>To do so, put the control valve out of operation (see Chapter 10). |
| Check the control valve for external damage that could impair the proper functioning of the control valve or even its safe operation. | Repair any damage immediately. If necessary, put the control valve out of operation to do so (see Chapter 10). |
| Check the valve accessories to ensure they are firmly mounted. | Tighten the connections of the valve accessories. |

| Inspection and testing | Recommended action to be taken in the event of a negative result |
|---|---|
| Check to ensure that the actuator stem and plug/piston stems move smoothly. | Version with adjustable packing [2]: Tighten the packing correctly (see section 'Adjusting the packing' in Chapter 5.5.1). |
| | If the actuator stem or plug/piston stem is blocked, put the control valve out of operation (see Chapter 10) and remove the blockage. **WARNING!** A blocked actuator or plug or piston stem (e.g. due to seizing up after remaining in the same position for a long time) can suddenly start to move uncontrollably. Injury to hands or fingers is possible if they are inserted into the actuator or valve. Before trying to unblock the actuator stem or plug/piston stem, disconnect and lock the air supply as well as the control signal. Before unblocking the actuator, release any stored energy in the actuator (e.g. spring compression). See associated actuator documentation. |
| | SAMSON recommends the use of positioners with integrated diagnostic firmware for control valves used for on/off service. The partial stroke test included in this software helps prevent a shut-off valve normally in its end position from seizing up or getting jammed. |
| If possible, check the valve's fail-safe position by briefly interrupting the air supply. | Put the control valve out of operation (see Chapter 10). Identify the cause for the malfunction and rectify it (see Chapter 8). |

1) EXPERTplus valve diagnostics can help identify external leakage at dynamic sealing systems as well as seat leakage in valve versions without balanced plugs while the valve is in use. EXPERTplus comes as standard in the digital positioners (Type 3730, TROVIS 3730, Type 3731, TROVIS 3793, TROVIS 3797).

2) See Chapter 2

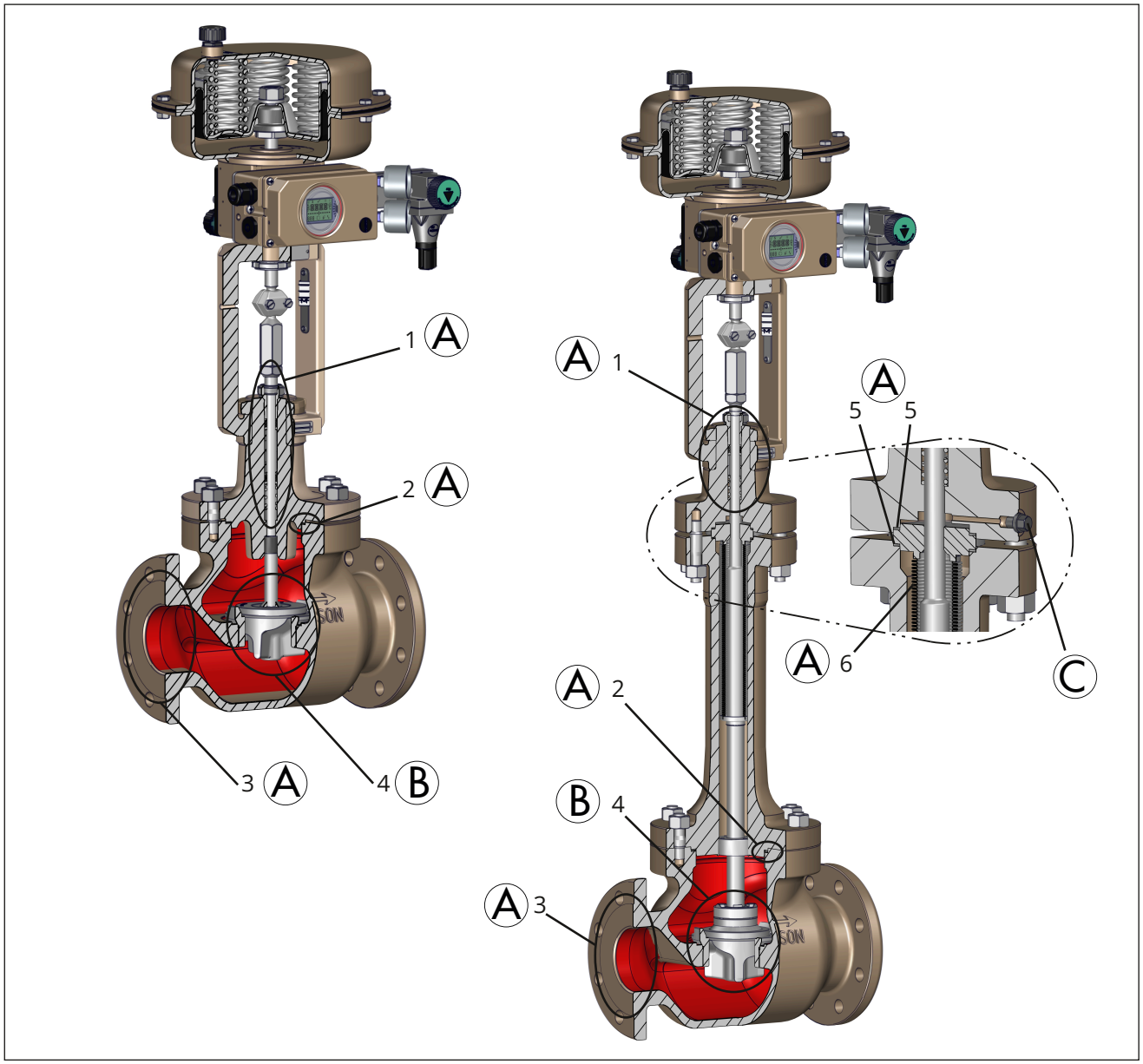


**Fig. 32:** *Possible points of leakage on the control valve: Version with standard bonnet (left) and version with bellows seal (right), which also applies to versions with insulating section or intermediate piece.*

Ⓐ External leakage

Ⓑ Seat leakage

Ⓒ Test connection to monitor bellows for leakage

1 Plug stem guide (packing)
(dynamic sealing)

2 Body gaskets
(static sealing)

3 Seat/body and plug/seat

4 Connection to the pipeline
(static sealing)

5 Body gaskets at bellows seal/insulating section/intermediate piece
(static sealing)

6 Metal bellows
(dynamic sealing)

## 9.2 Preparation for servicing or conversion work

**⚠ WARNING**

***Risk of personal injury due to incorrect removal of the anti-rotation fixture under tension.***

*Once the actuator has been mounted on the valve and the assembly is ready for use, the clamps (301) of the anti-rotation fixture on the plug stem are under tension.*

⇨ *Follow the instructions in this document during mounting or removal.*

⇨ *Do not loosen the screws (303) of the anti-rotation fixture while the force generated by the supply air and/or the actuator springs is transmitted to the actuator stem and the stem (9).*

⇨ *Remove the actuator from the valve or otherwise ensure that it cannot transmit any forces to the actuator stem before removing the anti-rotation fixture from the plug stem.*

1. Lay out the necessary material and tools to have them ready for the service work.
2. Put the control valve out of operation (see Chapter 10).
3. Remove the actuator from the valve (see associated actuator documentation).

   **i *Note***

   *To remove an actuator with "stem extends" fail-safe action and/or with preloaded springs, a certain signal pressure must be applied to the actuator (see associated actuator documentation). Once the work is completed, the signal pressure must be removed and the air supply disconnected again and locked.*

4. **Valve version without anti-rotation fixture:** Unscrew the stem connector nut (9) and lock nut (10) from the plug/piston stem.

   **Valve version with anti-rotation fixture:** Unscrew the stem connector clamps (301) and stem (9) from the plug/piston stem. Keep them together with the screws (303) and washers (304) in a safe place for later use.

**Tip**

*SAMSON recommends removing the valve from the pipeline before performing any service work (see Chapter 11).*

Once preparation is completed, the service and/or conversion work can be performed as described in the subchapters of Chapter 9.4.

## 9.3 Mounting the actuator on the valve after service and conversion work

1. **Valve version without anti-rotation fixture:** Loosely thread the lock nut (10) and stem connector nut (9) on the plug/piston stem (36).

   **Valve version with anti-rotation fixture:** Apply a thin film of lubricant (114) to the threads of the stem (9) and screws (303).

   **NOTICE**

   ***Impaired functioning due to incorrectly applied lubricant.***

   ⇨ *Do not apply any lubricant to the threads of the clamps (301) or plug/piston stem.*

   Position the clamps (301) and stem (9) on the plug or piston stem according to Table 8 in Chapter 5.3.1 and tighten screws (303) and washers (304) by hand.
2. Mount the actuator on the valve (see associated actuator documentation and Chapter 5).
3. Adjust lower or upper signal bench range (see associated actuator documentation).
4. If the valve has been removed, re-install the valve into the pipeline (see Chapter 5).
5. Put the control valve back into operation (see Chapter 6). Observe the requirements and conditions for start-up or putting the device back into operation.

## 9.4 Service or conversion work

⇨ Before performing any service or conversion work, preparations must be made to the control valve (see Chapter 9.2).

⇨ After all service or conversion work is completed, check the control valve before putting it back into operation (see Chapter 5.5).

**NOTICE**

***Risk of control valve damage due to incorrect servicing or conversion.***

⇨ *Only perform service or conversion work on valves which meet all the following conditions:*

- *The nominal size is ≤NPS 4.*
- *The valve does not have a bellows seal.*
- *The valve does not have a flow divider.*
- *The valve does not have a balanced plug.*

⇨ *Contact our after-sales service for service or conversion work on all other versions.*

## 9.4.1 Replacing gaskets in versions with standard bonnet or insulating section

**NOTICE**

***Risk of impaired functioning of the control valve due to damaged parts.***

⇨ *Clean and check all the contact facings in the body and all other parts that come into contact with the gaskets to ensure they are free from damage before installing any new gaskets.*

⇨ *Renew any parts with damaged facings or contact our after-sales service.*

**a) Version with clamped-in seat and plug**

1. Proceed as described in Chapter 9.4.3, section 'a) Removing the (clamped-in) seat and plug'.
2. Proceed as described in Chapter 9.4.3, section 'd) Installing the (clamped-in) seat and plug'.

**b) Version with screwed-in seat and plug**

1. **Packing centrally fastened with threaded bushing:** Unscrew the threaded bushing (8) and pull it off the plug stem (36).

   **Packing with packing flange:**

   a) Gradually unthread the two packing nuts (163) at the hex head in a crisscross pattern.
   b) Lift the two packing nuts (including disk springs when packing flange is loaded by external spring elements) as well as the packing flange (162) upward over the studs (164) off the valve bonnet (2/21).
   c) Pull out the packing follower (8).

2. Undo the body nuts (14) gradually in a crisscross pattern.
3. Pull the valve bonnet (2/21) including yoke (60) upward off the plug stem (36) and lift it off the body (1). If necessary, slightly press the plug stem (36) downward. This helps overcome the static friction between the packing (15) and plug stem (36) to ensure that the trim remains in the body (1).
4. Remove spiral wound gaskets (17, 126) from the body (1) or valve bonnet (2/21).
5. Pull the support element (63) upward out of the body (1). Use special tool for large nominal sizes.
6. Pull the plug (5) and plug stem (36) upward out of the body (1).
7. Use special tool to unscrew the retaining ring (221) and remove it from the body (1).
8. Remove the seat (4) and spiral wound gasket (127) from the body (1).
9. Clean all removed parts and the inside of the valve body (seating surfaces of the gaskets) and check them to ensure that they are free of damage.
10. Insert a new spiral wound gasket (127) into the body (1) in the seat bridge area.
11. Place the seat (4) on the spiral wound gasket (127) in the body (1).
12. Screw in the retaining ring (221) to fasten down the seat (4) in the body (1). Use special tool and observe tightening torque.
13. Insert the plug (5) and plug stem (36) upright into the body (1) and center them on the seat (4).

    **Version with perforated plug:** Align the plug (5), making sure that the hole of the plug that releases the flow first faces toward the valve outlet.

    See Chapter 5.3.2.
14. Insert the support element (63) (including the pressed-in bushing (7)) upright over the plug stem (36) into the body (1) until it rests on the seating surface inside the body. Use special tool for large nominal sizes.
15. Place a new spiral wound gasket (126) on the support element (63).
16. Insert a new spiral wound gasket (17) into the body (1).
17. Place the valve bonnet (2/21) including yoke (60) from the top over the plug stem (36) onto the body (1). Observe the alignment (see Fig. 33). The two boreholes on the top of the bonnet must be at a right angle to the pipeline axis.

18. Press the plug (5) firmly into the seat (4), while fastening down the valve bonnet (2/21) with the body nuts (14). Tighten the body nuts (14) gradually in a crisscross pattern. Observe tightening torques.
19. Install the packing (see Chapter 9.4.2).

**Tip**

*SAMSON recommends using new packing parts.*

**c) Version with cage and piston**

1. Proceed as described in Chapter 9.4.3, section 'c) Removing the cage and piston'.
2. Proceed as described in Chapter 9.4.3, section 'f) Installing the cage and piston'.

## 9.4.2 Replacing the packing in versions with standard bonnet or insulating section

**NOTICE**

***Leakage due to incorrectly assembled packing.***

*Specialized knowledge is required to assemble a packing set and ensure a newly installed packing seals properly. Factors, such as the packing version, its elements, the materials of the packing parts and the use of lubricants, play an important role.*

⇨ *The qualified personnel must have the necessary knowledge and experience in this case and be trained accordingly.*

⇨ *Our after-sales service can support you.*

**a) Packing centrally fastened with threaded bushing**

Different types of packing can be installed in the valve, which are centrally fastened with the threaded bushing. Refer to the documentation of the spare packing for the sequence and alignment of the packing parts as well as information on lubricants.

1. Unscrew the threaded bushing (8) and pull it off the plug/piston stem (36).
2. Undo the body nuts (14) gradually in a crisscross pattern.
3. Pull the valve bonnet (2/21) including yoke (60) upward off the plug/piston stem (36) and lift it off the body (1).

   If necessary, slightly press the plug/piston stem (36) downward. This helps overcome the static friction between the packing (15) and plug/piston stem (36) to ensure that the trim remains in the body (1).
4. Pull the entire packing out of the packing chamber using a suitable tool.
5. Clean the packing chamber thoroughly.
6. Use new packing parts (15) if they are worn or damaged.
7. Refer to the documentation of the spare packing for information on lubricants.

   **Depending on packing version and application:** Apply a suitable lubricant to all packing parts and the plug/piston stem (36).

   **Or if applicable:** Do not use any lubricant.
8. Insert the plug/piston (5) together with the plug/piston stem (36) and position them in the seat (4) in the closed position.

   **Version with perforated plug:** Align the plug (5), making sure that the hole of the plug that releases the flow first faces toward the valve outlet.

   See Chapter 5.3.2.
9. Place a new spiral wound gasket (17) on the valve body (1). Before inserting the gasket, clean the seating surface and check for damage.
10. Place a new spiral wound gasket (126) on the support element (63) or seat retainer (124). Before inserting the gasket, clean the seating surface and check for damage.
11. Place the valve bonnet (2/21) including yoke (60) from the top over the plug/piston stem (36) onto the body (1). Observe the alignment (see Fig. 33). The two boreholes on the top of the bonnet must be at a right angle to the pipeline axis.
12. Firmly press the plug/piston (5) into the seat (4), while fastening down the valve bonnet (2/21) with the body nuts (14). Tighten the body nuts (14) gradually in a crisscross pattern. Observe tightening torques.
13. Carefully slide the packing parts over the plug/piston stem (36) into the packing chamber using a suitable tool. Refer to the documentation of the spare packing for the correct sequence and alignment of the parts.
14. Screw in and hand-tighten threaded bushing (8).

15. Tighten threaded bushing (8) gradually applying the specified tightening torque.
16. If necessary, adjust the packing (see section 'Adjusting the packing' in Chapter 5.5.1).

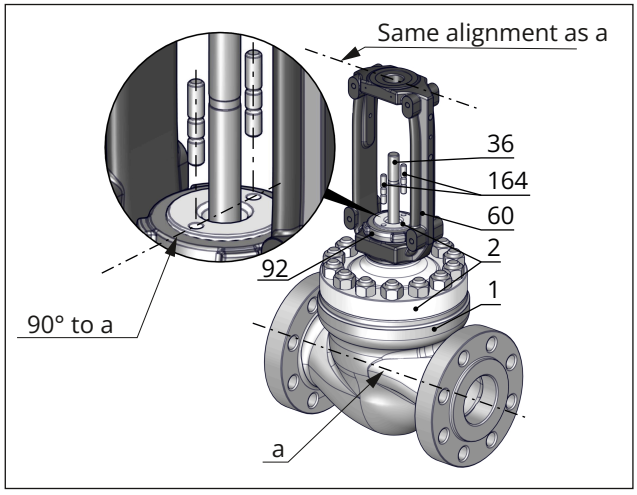


**Fig. 33:** *Alignment of bonnet on the valve body and alignment of yoke on the bonnet*

| | | | |
|---|---|---|---|
| a | Pipeline axis | 60 | Yoke |
| 1 | Valve body | 92 | Castellated nut |
| 2 | Bonnet | 164 | Studs (when a packing flange is used) |
| 36 | Plug/piston stem | | |

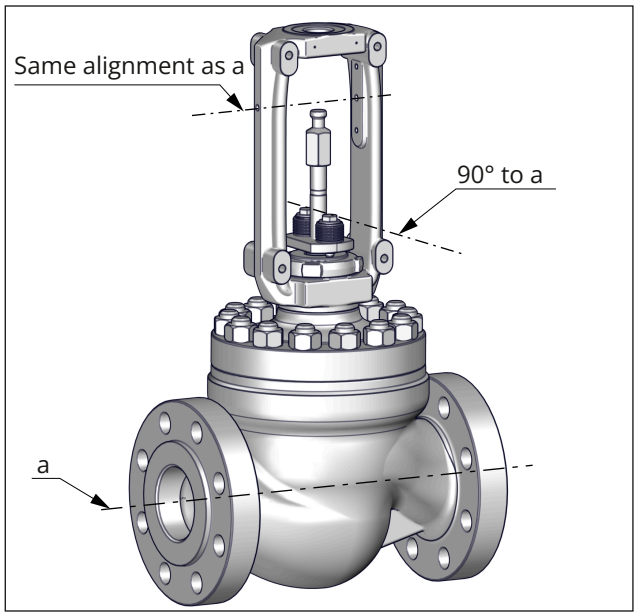


**Fig. 34:** *Alignment of the packing flange in the yoke*

a Pipeline axis

### b)Version with packing flange (with or without external spring elements)

Different types of packing can be installed in the valve using the packing flange. Refer to the documentation of the spare packing for the sequence and alignment of the packing parts as well as information on lubricants.

1. Gradually unthread the two packing nuts (163) at the hex head in a crisscross pattern.
2. Lift the two packing nuts (including disk springs when packing flange is loaded by external spring elements) as well as the packing flange (162) upward over the studs (164) off the valve bonnet (2/21).
3. Pull out the packing follower (8).
4. Undo the body nuts (14) gradually in a crisscross pattern.
5. Pull the valve bonnet (2/21) including yoke (60) upward off the plug/piston stem (36) and lift it off the body (1).

   If necessary, slightly press the plug/piston stem (36) downward. This helps overcome the static friction between the packing (15) and plug/piston stem (36) to ensure that the trim remains in the body (1).
6. Pull the entire packing out of the packing chamber using a suitable tool.
7. Clean the packing chamber thoroughly.
8. Use new packing parts (15) if they are worn or damaged.
9. Refer to the documentation of the spare packing for information on lubricants.

   **Depending on packing version and application:** Apply a suitable lubricant to all packing parts and the plug/piston stem (36).

   **Or if applicable:** Do not use any lubricant.
10. Insert the plug/piston (5) together with the plug/piston stem (36) and position them in the seat (4) in the closed position.

    **Version with perforated plug:** Align the plug (5), making sure that the hole of the plug that releases the flow first faces toward the valve outlet.

    See Chapter 5.3.2.
11. Place a new spiral wound gasket (17) on the valve body (1). Before inserting the gasket, clean the seating surface and check for damage.
12. Place a new spiral wound gasket (126) on the support element (63) or seat retainer (124). Before inserting the gasket, clean the seating surface and check for damage.
13. Place the valve bonnet (2/21) including yoke (60) from the top over the plug/piston stem (36) onto the body (1). Observe the alignment (see

Fig. 33). The two boreholes on the top of the bonnet must be at a right angle to the pipeline axis.

14. Firmly press the plug/piston (5) into the seat (4), while fastening down the valve bonnet (2/21) with the body nuts (14). Tighten the body nuts (14) gradually in a crisscross pattern. Observe tightening torques.
15. Carefully slide the packing parts over the plug/piston stem (36) into the packing chamber using a suitable tool. Refer to the documentation of the spare packing for the correct sequence and alignment of the parts.
16. Insert packing follower (8).
17. Place the packing flange (162) over the studs (164) of the valve bonnet (2/21) on the packing follower (8).
18. Thread the two packing nuts (163) (including disk springs when packing flange is loaded by external spring elements) onto the studs (164) and finger-tighten them. In the version with spring-loaded packing, the packing nuts (163) must be guided through the holes in the packing flange.
19. Gradually tighten the two packing nuts (163) on the packing flange (162) at the hex head in a crisscross pattern until the specified tightening torque is reached.
20. If necessary, adjust the packing (see section 'Adjusting the packing' in Chapter 5.5.1).

## 9.4.3 Replacing the trim in versions with standard bonnet or insulating section

***NOTICE***

***Risk of damage to the facing of the seat and plug due to incorrect servicing.***

⇨ *Always replace both the seat and plug.*

***Tip***

*SAMSON recommends using new packing parts and gaskets when replacing the trim.*

**a) Removing the (clamped-in) seat and plug**

1. **Packing centrally fastened with threaded bushing:** Unscrew the threaded bushing (8) and pull it off the plug stem (36).

   **Packing with packing flange:**

   a) Gradually unthread the two packing nuts (163) at the hex head in a crisscross pattern.
   b) Lift the two packing nuts (including disk springs when packing flange is loaded by external spring elements) as well as the packing flange (162) upward over the studs (164) off the valve bonnet (2/21).
   c) Pull out the packing follower (8).
2. Undo the body nuts (14) gradually in a crisscross pattern.
3. Pull the valve bonnet (2/21) including yoke (60) upward off the plug stem (36) and lift it off the body (1). If necessary, slightly press the plug stem (36) downward. This helps overcome the static friction between the packing (15) and plug stem (36) to ensure that the trim remains in the body (1).
4. Pull all the packing parts out of the packing chamber in the valve bonnet (2/21) using a suitable tool.
5. Remove spiral wound gaskets (17, 126) from the body (1) or valve bonnet (2/21).
6. Pull the seat retainer (124) upward out of the body (1). Use special tool for large nominal sizes.
7. Pull the plug (5) and plug stem (36) upward out of the body (1).
8. Remove the seat (4) and spiral wound gasket (127) from the body (1).

**b) Removing the (screwed-in) seat and plug**

1. **Packing centrally fastened with threaded bushing:** Unscrew the threaded bushing (8) and pull it off the plug stem (36).

   **Packing with packing flange:**

   a) Gradually unthread the two packing nuts (163) at the hex head in a crisscross pattern.
   b) Lift the two packing nuts (including disk springs when packing flange is loaded by external spring elements) as well as the packing flange (162) upward over the studs (164) off the valve bonnet (2/21).
   c) Pull out the packing follower (8).
2. Undo the body nuts (14) gradually in a crisscross pattern.
3. Pull the valve bonnet (2/21) including yoke (60) upward off the plug stem (36) and lift it off the body (1). If necessary, slightly press the plug stem (36) downward. This helps overcome the static friction between the packing (15) and plug

stem (36) to ensure that the trim remains in the body (1).

4. Pull all the packing parts out of the packing chamber in the valve bonnet (2/21) using a suitable tool.
5. Remove spiral wound gaskets (17, 126) from the body (1) or valve bonnet (2/21).
6. Pull the support element (63) upward out of the body (1). Use special tool for large nominal sizes.
7. Pull the plug (5) and plug stem (36) upward out of the body (1).
8. Use special tool to unscrew the retaining ring (221) and remove it from the body (1).
9. Remove the seat (4) and spiral wound gasket (127) from the body (1).

**c) Removing the cage and piston**

1. **Packing centrally fastened with threaded bushing:** Unscrew the threaded bushing (8) and pull it off the plug stem (36).

   **Packing with packing flange:**

   a) Gradually unthread the two packing nuts (163) at the hex head in a crisscross pattern.
   b) Lift the two packing nuts (including disk springs when packing flange is loaded by external spring elements) as well as the packing flange (162) upward over the studs (164) off the valve bonnet (2/21).
   c) Pull out the packing follower (8).
2. Undo the body nuts (14) gradually in a crisscross pattern.
3. Pull the valve bonnet (2/21) including yoke (60) upward off the plug stem (36) and lift it off the body (1). If necessary, slightly press the plug stem (36) downward. This helps overcome the static friction between the packing (15) and plug stem (36) to ensure that the trim remains in the body (1).
4. Pull all the packing parts out of the packing chamber in the valve bonnet (2/21) using a suitable tool.
5. Remove spiral wound gaskets (17, 126) from the body (1), cylinder (463) or valve bonnet (2/21).
6. Remove cylinder (463) and seal (45) from the body (1). Use special tool for large nominal sizes.
7. Pull the piston (5) and piston stem (36) upward out of the cage (424) and remove from the body (1).
8. Remove the cage (424) from the body (1). Use special tool for large nominal sizes.
9. Remove the seat (4) and spiral wound gasket (127) from the body (1).

**d) Installing the (clamped-in) seat and plug**

1. Clean the inside of the valve body (seating surfaces of the gaskets) and check it to ensure that it is free of damage.
2. Clean the packing chamber in the valve bonnet (2/21) thoroughly.
3. Insert a new spiral wound gasket (127) into the body (1) in the seat bridge area.
4. Place the seat (4) on the spiral wound gasket (127) in the body (1).
5. Insert the plug (5) and plug stem (36) upright into the body (1) and center them on the seat (4).

   **Version with perforated plug:** Align the plug (5), making sure that the hole of the plug that releases the flow first faces toward the valve outlet.

   See Chapter 5.3.2.
6. Insert the seat retainer (124) (including pressed-in bushing (7)) upright over the plug stem (36) into the body (1) and center them on the seat (4). Use special tool for large nominal sizes. Align the openings of the seat retainer (124) symmetrically with the pipeline axis.
7. Place a new spiral wound gasket (126) on the seat retainer (124).
8. Insert a new spiral wound gasket (17) into the body (1).
9. Place the valve bonnet (2/21) including yoke (60) from the top over the plug stem (36) onto the body (1). Observe the alignment (see Fig. 33). The two boreholes on the top of the bonnet must be at a right angle to the pipeline axis.
10. Press the plug (5) firmly into the seat (4), while fastening down the valve bonnet (2/21) with the body nuts (14). Tighten the body nuts (14) gradually in a crisscross pattern. Observe tightening torques.
11. Install the packing (see Chapter 9.4.2).

### e) Installing the (screwed-in) seat and plug (nominal size ≤NPS 6, ≤Class 600)

1. Clean the inside of the valve body (seating surfaces of the gaskets) and check it to ensure that it is free of damage.
2. Clean the packing chamber in the valve bonnet (2/21) thoroughly.
3. Insert a new spiral wound gasket (127) into the body (1) in the seat bridge area.
4. Place the seat (4) on the spiral wound gasket (127) in the body (1).
5. Screw in the retaining ring (221) to fasten down the seat (4) in the body (1). Use special tool and observe tightening torque.
6. Insert the plug (5) and plug stem (36) upright into the body (1) and center them on the seat (4).

   **Version with perforated plug:** Align the plug (5), making sure that the hole of the plug that releases the flow first faces toward the valve outlet.

   See Chapter 5.3.2.
7. Insert the support element (63) (including the pressed-in bushing (7)) upright over the plug stem (36) into the body (1) until it rests on the seating surface inside the body. Use special tool for large nominal sizes.
8. Place a new spiral wound gasket (126) on the support element (63).
9. Insert a new spiral wound gasket (17) into the body (1).
10. Place the valve bonnet (2/21) including yoke (60) from the top over the plug stem (36) onto the body (1). Observe the alignment (see Fig. 33). The two boreholes on the top of the bonnet must be at a right angle to the pipeline axis.
11. Press the plug (5) firmly into the seat (4), while fastening down the valve bonnet (2/21) with the body nuts (14). Tighten the body nuts (14) gradually in a crisscross pattern. Observe tightening torques.
12. Install the packing (see Chapter 9.4.2).

### f) Installing the cage and piston

**NOTICE**

***Risk of valve damage due to poor flow conditions.***

*The cage in the cage version can be manufactured with openings of varying size. The process medium in the valve flows through the opening as soon as the piston is lifted upward in the cage.*

⇨ *To achieve the best flow conditions inside the valve, install the cage with the largest opening facing toward the valve outlet.*

1. Clean the inside of the valve body (seating surfaces of the gaskets) and check it to ensure that it is free of damage.
2. Clean the packing chamber in the valve bonnet (2/21) thoroughly.
3. Insert a new spiral wound gasket (127) into the body (1) in the seat bridge area.
4. Place the seat (4) on the spiral wound gasket (127) in the body (1).
5. Insert the cage (424) into the body (1) and position it on the seat (4), while aligning the cage (424) within the valve body to ensure that the largest opening faces toward the valve outlet.
6. Insert the piston (5) together with the piston stem (36) upright through the cage (424) into the valve body (1) and position it on the seat (4).
7. Place a new seal (45) on the cylinder (463). Make sure the seal is properly aligned (see Fig. 35).
8. Place the cylinder (463) together with the seal (45) over the piston stem (36) on the cage (424).
9. Place a new spiral wound gasket (126) on the cylinder (463).
10. Insert a new spiral wound gasket (17) into the body (1).
11. Place the valve bonnet (2/21) including yoke (60) from the top over the plug stem (36) onto the body (1). Observe the alignment (see Fig. 33). The two boreholes on the top of the bonnet must be at a right angle to the pipeline axis.
12. Press the piston (5) firmly into the seat (4), while fastening down the valve bonnet (2/21) with the body nuts (14). Tighten the body nuts (14) gradually in a crisscross pattern. Observe tightening torques.
13. Install the packing (see Chapter 9.4.2).

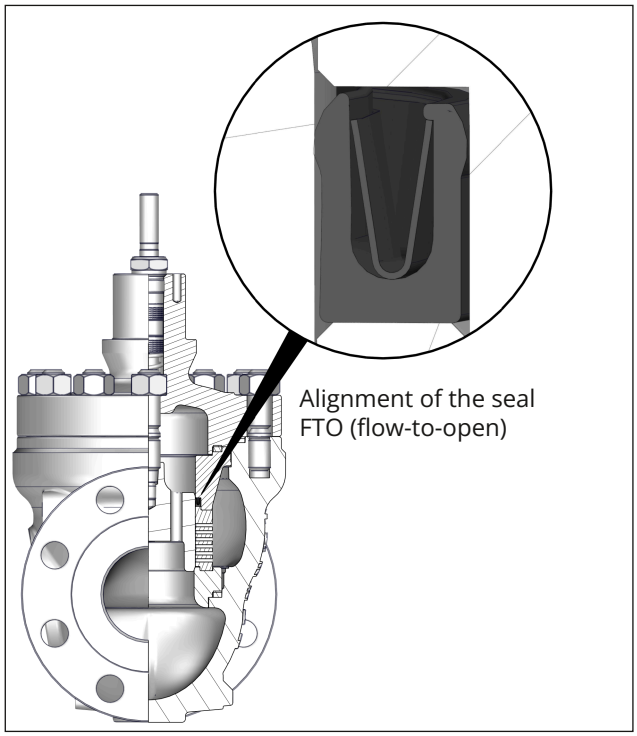


**Fig. 35:** *Alignment of seal (45) on FTO cage*

### 9.4.4 Replacing the plug/piston on the plug/piston stem

The plug/piston and plug/piston stem are fastened together. To prevent the plug/piston from becoming unintentionally detached from the plug/piston stem, the connection is additionally secured by a tangentially inserted pin (see Fig. 36). To replace the plug/piston, proceed as follows:

1. Firmly clamp the plug/piston (5) into a vise.
2. Use a suitable tool (mandrel) to drive the locking pin (103) out of the plug or piston in the “OUT” direction (see Fig. 36).
3. Unscrew the plug/piston stem (36) from the plug or piston (5) using a suitable tool.
4. Dispose of the worn plug or piston.
5. Firmly clamp the new plug/piston (5) into a vise using protective jaws. Make sure that the plug/piston is not damaged by the vise.
6. Screw the plug/piston stem (36) into the plug or piston (5) and tighten using a suitable tool. Observe tightening torque.
7. Insert a new locking pin (103) into the hole in the plug or piston in the “IN” direction. Use a suitable tool (mandrel) to drive the pin in as far as it will go.
8. Use a suitable tool to slightly caulk the pin hole on the “IN” side to prevent the pin from slipping out unintentionally during valve operation.

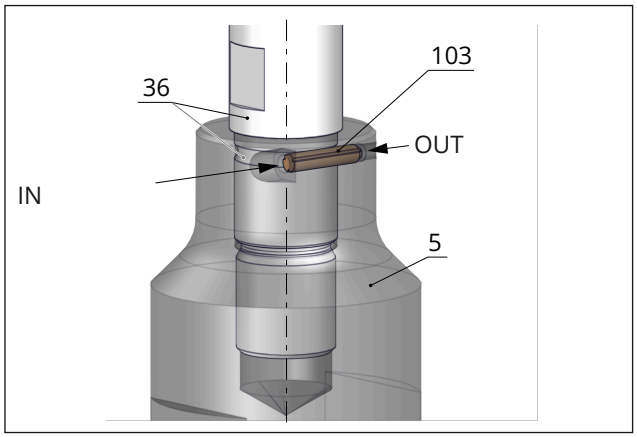


**Fig. 36:** *Locking pin to secure plug and plug stem or piston and piston stem (schematic drawing)*

5 Plug/piston
36 Plug stem/piston stem
103 Locking pin

## 9.5 Ordering spare parts and operating supplies

Contact your nearest SAMSON subsidiary or SAMSON's After-sales Service for information on spare parts, lubricants and tools.

**Spare parts**

See Chapter 15 for details on spare parts.

**Lubricants**

See Chapter 15 for details on suitable lubricants.

**Tools**

See Chapter 15 for details on suitable tools.

## 10 Decommissioning

The work described in this chapter is to be performed only by personnel appropriately qualified to carry out such tasks.

**⚠ DANGER**

***Risk of bursting due to incorrect opening of pressurized equipment or components.***

*Control valves and pipelines are pressure equipment that may burst when handled incorrectly. Flying projectile fragments or the release of process medium under pressure can cause serious injury or even death. Before starting any work on pressure-bearing or pressure-retaining parts belonging to the valve assembly:*

⇨ *Depressurize all plant sections affected and the valve (including the actuator). Release any stored energy.*

⇨ *Drain the process medium from the plant sections affected as well as from the valve.*

**⚠ WARNING**

***Risk of burn injuries due to hot or cold components and pipelines.***

*Depending on the process medium, valve components and pipelines may get very hot or cold during operation and cause burn injuries.*

⇨ *Follow the standard operating procedures provided by the plant operator.*

*In the event of a potential risk:*

⇨ *Allow components and pipelines to cool down or warm up to the ambient temperature.*

⇨ *Wear protective clothing and safety gloves.*

**⚠ WARNING**

***Risk of personal injury due to pressurized components and as a result of process medium being discharged.***

*Valves with a bellows seal have a test connection at the top on the intermediate piece.*

⇨ *Do not loosen the screw on the test connection while the valve is pressurized.*

**⚠ WARNING**

***Risk of hearing loss or deafness due to loud noise.***

*Noise emission (e.g. cavitation or flashing) may occur during operation caused by the process medium and the operating conditions. Additionally, a loud noise may briefly occur through the sudden venting of the pneumatic actuator or pneumatic valve accessories not fitted with noise-reducing elements. Both can damage hearing.*

⇨ *Follow the standard operating procedures provided by the plant operator.*

*In the event of a potential risk:*

⇨ *Wear hearing protection when working near the valve.*

**⚠ WARNING**

***Crush hazard arising from moving parts.***

*The control valve contains moving parts (actuator stem and plug/piston stem), which can injure hands or fingers if inserted into the valve.*

⇨ *Do not insert hands or finger into the yoke while the air supply is connected to the actuator.*

⇨ *Before working on the pneumatic control valve, disconnect and lock the pneumatic air supply as well as the control signal.*

⇨ *Do not impede the movement of the actuator stem and plug/piston stem by inserting objects into the yoke.*

⇨ *Before unblocking the actuator stem and plug/piston stem after they have become blocked (e.g. due to seizing up after remaining in the same position for a long time), release any stored energy in the actuator (e.g. spring compression). See associated actuator documentation.*

**⚠ WARNING**

***Risk of personal injury due to exhaust air being vented or compressed air escaping from pneumatically operated components.***

*When the valve is operated with a pneumatic actuator or pneumatic valve accessories, exhaust air is vented from the actuator, for example, while the valve is operating and when the valve opens or closes.*

⇨ *Wear eye protection when working in close proximity to pneumatic fittings and in the danger zone of the vent openings.*

**⚠ WARNING**

***Risk of personal injury due to residual process medium in the valve.***

*While working on the valve, residual medium can flow out of the valve and, depending on its properties, cause personal injury, e.g. (chemical) burns.*

⇨ *Follow the standard operating procedures provided by the plant operator.*

*In the event of a potential risk:*

⇨ *If possible, drain the process medium from the plant sections affected and from the valve.*

⇨ *Wear protective clothing, safety gloves, respiratory protection and eye protection.*

To put the control valve out of operation for service work or to remove it from the pipeline, proceed as follows:

1. Close the shut-off valves upstream and downstream of the control valve to stop the process medium from flowing through the valve.
2. Completely drain the pipelines and valve.
3. Disconnect and lock the pneumatic air supply to depressurize the actuator.
4. Release any stored energy.
5. If necessary, allow the pipeline and valve components to cool down or warm up to the ambient temperature.

## 11 Removal

The work described in this chapter is to be performed only by personnel appropriately qualified to carry out such tasks.

**⚠ WARNING**

***Risk of burn injuries due to hot or cold components and pipelines.***

*Depending on the process medium, valve components and pipelines may get very hot or cold during operation and cause burn injuries.*

⇨ *Follow the standard operating procedures provided by the plant operator.*

*In the event of a potential risk:*

⇨ *Allow components and pipelines to cool down or warm up to the ambient temperature.*

⇨ *Wear protective clothing and safety gloves.*

**⚠ WARNING**

***Crush hazard arising from moving parts.***

*The control valve contains moving parts (actuator stem and plug/piston stem), which can injure hands or fingers if inserted into the valve.*

⇨ *Do not insert hands or finger into the yoke while the air supply is connected to the actuator.*

⇨ *Before working on the pneumatic control valve, disconnect and lock the pneumatic air supply as well as the control signal.*

⇨ *Do not impede the movement of the actuator stem and plug/piston stem by inserting objects into the yoke.*

⇨ *Before unblocking the actuator stem and plug/piston stem after they have become blocked (e.g. due to seizing up after remaining in the same position for a long time), release any stored energy in the actuator (e.g. spring compression). See associated actuator documentation.*

**⚠ WARNING**

***Risk of personal injury due to residual process medium in the valve.***

*While working on the valve, residual medium can flow out of the valve and, depending on its properties, cause personal injury, e.g. (chemical) burns.*

⇨ *Follow the standard operating procedures provided by the plant operator.*

*In the event of a potential risk:*

⇨ *If possible, drain the process medium from the plant sections affected and from the valve.*

⇨ *Wear protective clothing, safety gloves, respiratory protection and eye protection.*

**⚠ WARNING**

***Risk of personal injury due to preloaded springs in pneumatic actuators.***

*Valves in combination with pneumatic actuators with preloaded springs are under tension. These control valves with SAMSON pneumatic linear actuators (e.g. Type 3271/3277 or Type 3371) can be identified by the long bolts protruding from the bottom of the actuator.*

⇨ *Before starting any work on the actuator, which requires the actuator to be opened, or when the actuator stem has become blocked, relieve the compression from the preloaded springs (see associated actuator documentation).*

**⚠ WARNING**

***Risk of personal injury due to incorrect removal of the anti-rotation fixture under tension.***

*Once the actuator has been mounted on the valve and the assembly is ready for use, the clamps (301) of the anti-rotation fixture on the plug stem are under tension.*

⇨ *Follow the instructions in this document during mounting or removal.*

⇨ *Do not loosen the screws (303) of the anti-rotation fixture while the force generated by the supply air and/or the actuator springs is transmitted to the actuator stem and the stem (9).*

⇨ *Remove the actuator from the valve or otherwise ensure that it cannot transmit any forces to the actuator stem before removing the anti-rotation fixture from the plug stem.*

Before removing, make sure that the following conditions are met:

– The control valve is put out of operation (see Chapter 10).

## 11.1 Removing the valve from the pipeline

**Version with flanges**

1. Support the control valve to hold it in place when separated from the pipeline (see Chapter 4).
2. Unbolt the flanged joint.
3. Remove the valve from the pipeline (see Chapter 4).

**Version with welding ends**

1. Support the control valve to hold it in place when separated from the pipeline (see Chapter 4).
2. Cut the pipeline in front of the weld seam.
3. Remove the valve from the pipeline (see Chapter 4).

## 11.2 Removing the actuator from the valve

See associated actuator documentation.

# 12 Repairs

If the control valve does not function properly according to how it was originally sized or does not function at all, it is defective and must be repaired or exchanged.

**NOTICE**

***Risk of valve damage due to incorrect service or repair work.***

⇨ *Do not perform any repair work on your own.*

⇨ *Contact SAMSON's After-sales Service for service and repair work.*

## 12.1 Returning devices to SAMSON

Defective devices can be returned to SAMSON for repair.

Proceed as follows to return devices:

1. Exceptions apply concerning some special device models ▶ www.samsongroup.com > Service > After-sales Service > Returning goods.
2. Register the return shipment and include the following information by e-mail returns-de@samsongroup.com:
   - Type
   - Article no.
   - Configuration ID
   - Original order
   - Completed Declaration on Contamination, which can be downloaded from the Internet at: ▶ www.samsongroup.com > Service > After-sales Service > Returning goods

   **After checking your registration, we will send you a return merchandise authorization (RMA).**
3. Attach the RMA (together with the Declaration on Decontamination) to the outside of your shipment so that the documents are clearly visible.
4. Send the shipment to the address given on the RMA.

**Note**

*Further information on returned devices and how they are handled can be found at:*

▶ *www.samsongroup.com > Service > After-sales Service*

# 13 Disposal



SAMSON is a producer registered in Europe, agency in charge
▶ www.samsongroup.com > About SAMSON > Environment, Social & Governance > Material Compliance > Waste electrical and electronic equipment (WEEE)
WEEE reg. no.: DE 62194439

Information on substances listed as substances of very high concern (SVHC) on the candidate list of the REACH regulation can be found in the document “Additional Information on Your Inquiry/Order”, which is added to the order documents, if applicable. This document includes the SCIP number assigned to the devices concerned. This number can be entered into the database on the European Chemicals Agency (ECHA) website (▶ https://www.echa.europa.eu/scip-database) to find out more information on the SVHC contained in the device.

**Note**

*SAMSON can provide you with a recycling passport on request. Simply e-mail us at aftersalesservice@samsongroup.com giving details of your company address.*

**Tip**

*On request, SAMSON can appoint a service provider to dismantle and recycle the product as part of a distributor take-back scheme.*

⇨ Observe local, national and international refuse regulations.

⇨ Do not dispose of components, lubricants and hazardous substances together with your other household waste.

# 14 Certificates

These declarations are included on the next pages:

- Declaration of conformity in compliance with Pressure Equipment Directive 2014/68/EU:
  - Country of origin: Germany
- Declaration of conformity in compliance with Machinery Directive 2006/42/EC for Types 251GR-1 and 251GR-7 Control Valves
- Declaration of incorporation in compliance with Machinery Directive 2006/42/EC for Type 251GR Valve with other actuators other than the Type 3271 or Type 3277 Actuator
- EAC conformity certificate in compliance with TR CU 012/2011 “Safety of equipment in hazardous areas” for the Eurasian Economic Union (EAEU)

The certificates shown were up to date at the time of publishing. The latest certificates can be found on our website: ▶ www.samsongroup.com > Products > Valves > 251GR

Other optional certificates are available on request.

# EU DECLARATION OF CONFORMITY

Translation of the German original

**Module H / N° CE-0062-PED-H-SAM 001-25-DEU-rev-A**

For the following products, SAMSON hereby declares under its sole responsibility:

| Devices | Series | Type | Version |
|---|---|---|---|
| Globe valve | 240 | 3241 | EN, cast iron body, DN 150 and larger, body of spheroidal graphite iron, DN 100 and larger, fluids G2, L1, L2 [1)] |
| | | | ENANSI, body of steel etc., all fluids |
| Three-way valve | 240 | 3244 | EN, cast iron body, DN 150 and larger, body of spheroidal graphite iron, DN 100 and larger, fluids G2, L1, L2 [1)] |
| | | | ENANSI, body of steel etc., all fluids |
| Cryogenic valve | 240 | 3248 | EN/ANSI, all fluids |
| Globe valve | 250 | 3251 | EN/ANSI, all fluids |
| Globe valve | 250 | 3251-E | EN/ANSI, all fluids |
| Three-way valve | 250 | 3253 | ENANSI, body of steel etc., all fluids |
| Globe valve | 250 | 3254 | EN/ANSI, all fluids |
| Angle valve | 250 | 3256 | EN/ANSI, all fluids |
| Angle valve (IG standard) | 250 | 3259 | EN, all fluids |
| Globe valve | V2001 | 3321 | EN, body of steel etc., all fluids |
| | | | ANSI, all fluids |
| Three-way valve | V2001 | 3323 | EN, body of steel etc., all fluids |
| | | | ANSI, all fluids |
| Silencer | 3381 | 3381-1 | EN/ANSI, single attenuation plate with welding ends, all fluids |
| | | 3381-3 | EN/ANSI, all fluids |
| | | 3381-4 | EN/ANSI, single multi-stage attenuation plate with welding ends, all fluids |
| Globe valve | 240 | 3241 | ANSI, cast iron body, Class 125, NPS 5 and larger, fluids G2, L1, L2 [1)] |
| Cryogenic valve | 240 | 3246 | EN/ANSI, all fluids |
| Three-way valve | 250 | 3253 | EN, cast iron body, DN 200 and larger, PN 16, fluids G2, L1, L2 [1)] |
| Globe valve | 290 | 3291 | ANSI, all fluids |
| Angle valve | 290 | 3296 | ANSI, all fluids |
| Cryogenic valve | – | 3588 | ANSI, up to NPS 6, Class 600, all fluids |
| Globe valve | 590 | 3591 | ANSI, all fluids |
| Cryogenic valve | 590 | 3598 | ANSI, NPS 3 to 8, Class 900, all fluids |
| Control valve | 590 | 3595 | ANSI, all fluids |
| Globe valve | SMS | 241GR | EN/ANSI, all fluids |
| Globe valve | SMS | 251GR | EN/ANSI, all fluids |
| Globe valve | SMS | 261GR | EN/ANSI, all fluids |
| Cryogenic valve | SMS | 251GC | EN/ANSI, all fluids |
| Angle valve | SMS | 251AR | EN/ANSI, all fluids |

[1)] Gases according Article 4(1)(c.i), second indent
Liquids according Article 4(1)(c.ii)

4000507059 | English | 1:2 | Revision: 15

Conformity with the following requirement:

| | | |
|---|---|---|
| Directive of the European Parliament and of the Council on the harmonization of the laws of the Member States relating to the making available on the market of pressure equipment | 2014/68/EU | of 15 May 2014 |
| Conformity assessment procedure applied for liquids according to Article 4(1) | Module H | Certificate no.:<br>N°CE-0062-PED-H-SAM 001-25-DEU-rev-A<br>by Bureau Veritas 0062 |

**The manufacturer's quality management system is monitored by the following notified body:**
Bureau Veritas Services SAS, 4 place des Saisons, 92400 Courbevoie, France

**Applied harmonized standards and technical standards:** EN 16668, ASME B16.34

**Manufacturer:** SAMSON AKTIENGESELLSCHAFT, Weismüllerstraße 3, 60314 Frankfurt am Main, Germany

Frankfurt am Main, 12 January 2026

Dr. Andreas Widl
Chairman of the Executive Board (CEO)

ppa. Sebastian Krause
Vice President Product Development

# EU DECLARATION OF CONFORMITY
TRANSLATION

## Declaration of Conformity of Final Machinery

in accordance with Annex II, section 1.A. of the Directive 2006/42/EC

For the following products:

**Types 251GR-1/-7 Pneumatic Control Valves consisting of the Type 251GR Valve and Type 3271/Type 3277 Pneumatic Actuator**

We hereby declare that the machinery mentioned above complies with all applicable requirements stipulated in Machinery Directive 2006/42/EC.

For product descriptions of the valve and actuator, refer to:

- Type 251GR Valve (DIN): Mounting and Operating Instructions EB 8003-GR
- Type 251GR Valve (ANSI): Mounting and Operating Instructions EB 8004-GR
- Types 3271 and 3277 Actuators: Mounting and Operating Instructions EB 8310-X

Valve accessories (e.g. positioners, limit switches, solenoid valves, lock-up valves, supply pressure regulators, volume boosters and quick exhaust valves) are classified as machinery components in this declaration of conformity and do not fall within the scope of the Machinery Directive as specified in § 35 and § 46 of the Guide to Application of the Machinery Directive 2006/42/EC issued by the European Commission. In the SAMSON Manual H 02 titled "Appropriate Machinery Components for SAMSON Pneumatic Control Valves with a Declaration of Conformity of Final Machinery", SAMSON defines the specifications and properties of appropriate machinery components that can be mounted onto the above specified final machinery.

Referenced technical standards and/or specifications:

- VCI, VDMA, VGB: "Leitfaden Maschinenrichtlinie (2006/42/EG) – Bedeutung für Armaturen, Mai 2018" [German only]
- VCI, VDMA, VGB: "Zusatzdokument zum „Leitfaden Maschinenrichtlinie (2006/42/EG) – Bedeutung für Armaturen vom Mai 2018" [German only], based on DIN EN ISO 12100:2011-03

Comment:
Information on residual risks of the machinery can be found in the mounting and operating instructions of the valve and actuator as well as in the referenced documents listed in the mounting and operating instructions.

Persons authorized to compile the technical file:
SAMSON AG, Weismüllerstraße 3, 60314 Frankfurt am Main, Germany
Frankfurt am Main, 7. November 2024

i.V.
Stephan Giesen
Director Product Management

i.V.
Sebastian Krause
Vice President Product Development

# DECLARATION OF INCORPORATION
TRANSLATION

**Declaration of Incorporation in Compliance with Machinery Directive 2006/42/EC**

For the following products:
**Type 251GR Pneumatic Control Valve**

We certify that the Type 251-GR Pneumatic Control Valves are partly completed machinery as defined in the Machinery Directive 2006/42/EC and that the safety requirements stipulated in Annex I, 1.1.2, 1.1.3, 1.1.5, 1.3.2, 1.3.4 and 1.3.7 are observed. The relevant technical documentation described in Annex VII, part B has been compiled.

Products we supply must not be put into service until the final machinery into which it is to be incorporated has been declared in conformity with the provisions of the Machinery Directive 2006/42/EC.

Operators are obliged to install the products observing the accepted industry codes and practices (good engineering practice) as well as the mounting and operating instructions. Operators must take appropriate precautions to prevent hazards that could be caused by the process medium and operating pressure in the valve as well as by the signal pressure and moving parts.

The permissible limits of application and mounting instructions for the products are specified in the associated data sheets as well as the mounting and operating instructions; the documents are available in electronic form on the Internet at www.samsongroup.com.

For product descriptions of the valve, refer to:
- Type 251GR Valve (DIN): Mounting and Operating Instructions EB 8003-GR
- Type 251GR Valve (ANSI): Mounting and Operating Instructions EB 8004-GR

Referenced technical standards and/or specifications:
- VCI, VDMA, VGB: Leitfaden Maschinenrichtlinie (2006/42/EG) – Bedeutung für Armaturen, May 2018 [German only]
- VCI, VDMA, VGB: Zusatzdokument zum „Leitfaden Maschinenrichtlinie (2006/42/EG) – Bedeutung für Armaturen“ vom Mai 2018 [German only], based on DIN EN ISO 12100:2011-03

Comments:
- See mounting and operating instructions for residual hazards.
- Also observe the referenced documents listed in the mounting and operating instructions.

Persons authorized to compile the technical file:

SAMSON AG, Weismüllerstraße 3, 60314 Frankfurt am Main, Germany
Frankfurt am Main, 7. November 2024

i.V.

Stephan Giesen
Director Product Management

i.V.

Sebastian Krause
Vice President Product Development

Revision no. 00

# ЕВРАЗИЙСКИЙ ЭКОНОМИЧЕСКИЙ СОЮЗ

# СЕРТИФИКАТ СООТВЕТСТВИЯ

№ ЕАЭС KZ.7500525.01.01.02386

Серия KZ № 0278657

**ОРГАН ПО СЕРТИФИКАЦИИ** БИН 990940001103, Товарищество с ограниченной ответственностью "Т-Стандарт", аттестат аккредитации: KZ.O.02.0525 от 17.10.2024, юридический адрес: Республика Казахстан, город Алматы, Бостандыкский район, проспект Аль-Фараби 19/1, ПФЦ «Нурлы-Тау», блок 3Б, 2 этаж, почтовый индекс: 050059, фактический адрес: Республика Казахстан, город Алматы, Бостандыкский район, проспект Аль-Фараби 19/1, ПФЦ «Нурлы-Тау», блок 3Б, 2 этаж, почтовый индекс: 050059, телефон: +7(701) 071 63 88, электронная почта: office@tst.kz

**ЗАЯВИТЕЛЬ** БИН 130640006195, Товарищество с ограниченной ответственностью "НИЦ ГеоСервис". Место нахождения (адрес юридического лица) и адрес места осуществления деятельности: Республика Казахстан, Карагандинская область, город Караганда, район имени Казыбек Би, улица Терешковой, 18, индекс: M02E3T6. телефон: +7(777) 540 50 96, электронная почта: cert_msk2@geomark.kz

**ИЗГОТОВИТЕЛЬ** «SAMSON AKTIENGESELLSCHAFT», располагающийся по адресу: Германия, Weismüllerstraße 3, 60314 Frankfurt am Main адрес осуществления деятельности: Германия, Weismüllerstraße 3, 60314 Frankfurt am Main, «SAMSON REGULATION S.A.S.», Франция, 1, rue Jean Corona, 69120 Vaulx-en-Velin

**ПРОДУКЦИЯ** Неэлектрическое оборудование: Арматура промышленная трубопроводная во взрывозащищенном исполнении: Клапаны регулирующие, типы 3241, 251GR, 3248, 3251, 3321, 3510, маркировка взрывозащиты и описание согласно приложению № 0116235-0116236; Продукция изготавливается в соответствии с ISO 80079-36 Explosive atmospheres – Part 36: Non-electrical equipment for explosive atmospheres – Basic method and requirements; серийный выпуск

**КОД ТН ВЭД ЕАЭС** **8481805910; 8481805990**

**СООТВЕТСТВУЕТ ТРЕБОВАНИЯМ** ТР ТС 012/2011 "О безопасности оборудования для работы во взрывоопасных средах" утвержденного решением Комиссии Таможенного союза от 18 октября 2011 г. № 825;

**СЕРТИФИКАТ СООТВЕТСТВИЯ ВЫДАН НА ОСНОВАНИИ** протоколов испытаний № ИЛ-11/10-4 - № ИЛ-11/10-7 от 10.11.2025г., № ИЛ-12/03-3 - № ИЛ-12/03-6 от 03.12.2025г. выданных аккредитованной Испытательной лабораторией филиала "Атырау" Товарищества с ограниченной ответственностью "Т-Стандарт" (аттестат: KZ.T.06.2232); акта анализа состояния производства от 27.10.2025г. (эксперт-аудитор Жигалина Г.М.), выданного Органом по подтверждению соответствия Товарищества с ограниченной ответственностью "Т-Стандарт" (аттестат: KZ.O.02.0525); пояснительной записки; технической документации; Схема сертификации: 1с

**ДОПОЛНИТЕЛЬНАЯ ИНФОРМАЦИЯ** Периодическую оценку сертифицируемой продукции проводит Орган по подтверждению соответствия Товарищества с ограниченной ответственностью "Т-Стандарт"; Действие сертификата распространяется на продукцию, изготовленную с 10.2025 г.; Условия и срок хранения продукции в соответствии с эксплуатационной документацией. Срок службы – 25 лет; Договор № 01-02/10 от 07.08.2025г.; ГОСТ 31610.0-2019 "Взрывоопасные среды. Часть 0. Оборудование. Общие требования"; ГОСТ 32407-2013 "Взрывоопасные среды. Часть 36. Неэлектрическое оборудование для взрывоопасных сред. Общие требования и методы испытаний"; ГОСТ ISO/DIS 80079-37-2013 "Взрывоопасные среды. Часть 37. Неэлектрическое оборудование для взрывоопасных сред – Неэлектрическое оборудование с видами взрывозащиты «конструкционная безопасность «c», контроль источника воспламенения «b», погружение в жидкость «k»;

**СРОК ДЕЙСТВИЯ с** 03.02.2026 **по** 02.02.2031 **ВКЛЮЧИТЕЛЬНО**

М.П.

**Руководитель (уполномоченное лицо) органа по сертификации** _____ (подпись) ОВЧИННИКОВА ВЕРА АЛЕКСАНДРОВНА (Ф.И.О.)

**Эксперт (эксперт-аудитор) (эксперты(эксперты-аудиторы))** _____ (подпись) ГОПТАРЕНКО ВЯЧЕСЛАВ ЮРЬЕВИЧ (Ф.И.О.)

Бланк изготовлен «КАОС», г. Астана

ЕВРАЗИЙСКИЙ ЭКОНОМИЧЕСКИЙ СОЮЗ

# ПРИЛОЖЕНИЕ

Серия KZ № 0116235

**К СЕРТИФИКАТУ СООТВЕТСТВИЯ № ЕАЭС** KZ 7500525.01.01.02386

1 лист

## 1. НАЗНАЧЕНИЕ И ОБЛАСТЬ ПРИМЕНЕНИЯ

Клапаны регулирующие, типы 3241, 251GR, 3248, 3251, 3321, 3510 во взрывозащищенном исполнении – далее клапаны, предназначены для регулирования и/или герметичного перекрытия потоков различных рабочих сред в системах трубопроводов.

Область применения – взрывоопасные зоны класса 1 и 2 по ГОСТ IEC 60079-10-1-2013 «Взрывоопасные среды. Часть 10-1. Классификация зон. Взрывоопасные газовые среды», зоны класса 21 и 22 по ГОСТ 31610.10-2-2017 (IEC 60079-10-2:2015) «Взрывоопасные среды. Часть 10-2. Классификация зон. Взрывоопасные пылевые среды».

## 2. ТЕХНИЧЕСКИЕ ХАРАКТЕРИСТИКИ

Основные технические характеристики регулирующих клапанов приведены в таблице 1. Подробные технические характеристики изделий указаны в технической документации изготовителя.

Таблица 1

| Тип | Маркировка взрывозащиты | Номинальный диаметр | | Номинальное давление | | Температура рабочей среды, °С | Диапазон температур окружающей среды, °С |
|---|---|---|---|---|---|---|---|
| | | DN, мм | NPS, дюймы | МПа (бар) | Class | | |
| 3241 | Ex h IIC T* Gb X<br>Ex h IIIC T* Db X | от 15 до 300 | от ½″ до 12 ″ | от 1,0 до 4,0 (от 10 до 40) | от 125 до 300 | от минус 196 °С до плюс 450 °С | от минус 60 °С до плюс 60 °С |
| 3251 | | от 15 до 500 | от ½″ до 20″ | от 1,6 до 40,0 (от 16 до 400) | от 150 до 2500 | от минус 196 °С до плюс 550 °С | от минус 60 °С до плюс 60 °С |
| 3248 | | от 25 до 150 | от 1 до 6 | от 1,6 до 10,0[1] (от 16 до 100)[1] | от 150 до 600 | от минус 196[2] °С до плюс 65 °С | от минус 60 °С до плюс 60 °С |
| 3321 | Примечание: T* - конкретные значения температуры, зависят от вида исполнения и указываются в маркировке конкретного прибора | от 15 до 100 | от ½″ до 4″ | от 1,6 до 4,0 (от 16 до 40) | от 125 до 300 | от минус 10 °С до плюс 300 °С | от минус 60 °С до плюс 60 °С |
| 3510 | | от 10 до 25 | от ½″ до 1″ | от 4,0 до 40,0 (от 40 до 400) | от 150 до 2500 | от минус 200 °С до плюс 450 °С | от минус 60 °С до плюс 60 °С |
| 251GR | | от 15 до 200 | от ½″ до 8″ | от 1,6 до 16,0 (от 16 до 160) | от 150 до 900 | от минус 50 °С до плюс 600 °С | от минус 60 °С до плюс 60 °С |

[1] для клапанов, изготовленных из алюминия, максимальное номинальное давление ограничено до 4 МПа (40 бар)

[2] для низкотемпературного исполнения нижний предел температуры рабочей среды составляет минус 273 °С.

## 3. ОПИСАНИЕ КОНСТРУКЦИИ И СРЕДСТВ ОБЕСПЕЧЕНИЯ ВЗРЫВОЗАЩИТЫ

Корпуса клапанов выполнены из стального литья, в том числе коррозионностойкого, жаропрочного, низкотемпературного, чугуна или из алюминия. Седло и плунжер уплотняются в закрытом положении, обеспечивая контроль потока. Шток уплотняется V-образным сальником или, при необходимости, сильфонным уплотнением (для минимизации утечек). Клапан пропускает рабочую среду в направлении, обозначенном стрелкой. Изготавливаются по модульному принципу, могут быть оснащены различными дополнительными устройствами: приводами, позиционерами, сигнализаторами конечных положений, электромагнитными клапанами, регуляторами давления, усилителями потока и другими дополнительными устройствами.

При возрастании регулирующего сигнала увеличивается усилие, действующее на мембрану в приводе. Пружины привода сжимаются. В зависимости от выбранного рабочего направления шток пневматического привода втягивается или выдвигается. В результате этого изменяется положение плунжера относительно седла, что, в свою очередь, определяет расход среды и, соответственно, давление. В конструкции с сильфонной вставкой контрольный штуцер позволяет контролировать герметичность сильфонной вставки из коррозионностойкой стали. Типы присоединений к трубопроводу: фланцевое, приварное, резьбовое (в зависимости от модели). Более подробное описание конструкции см. в технической документации изготовителя.

Взрывозащищенность клапанов обеспечивается выполнением требований стандартов: ГОСТ 31610.0-2019 (IEC 60079-0:2017); ГОСТ 32407-2013 (ISO/DIS 80079-36); ГОСТ ISO/DIS 80079-37-2013.

## 4. СПЕЦИАЛЬНЫЕ УСЛОВИЯ ПРИМЕНЕНИЯ

Знак «X», стоящий после Ex-маркировки, означает, что при эксплуатации необходимо соблюдать следующие специальные условия применения:

- монтаж, эксплуатацию, техническое обслуживание клапанов и навесного оборудования к ним проводить в соответствии с указаниями производителя по его технической документации; требованиями ГОСТ 31438.1-2011 (EN 1127-1:2007), ГОСТ IEC 60079-14-2013 регламентирующих применение данного оборудования во взрывоопасных зонах;
- запрещается эксплуатировать клапаны в условиях, превышающих предельные значения, указанные в техпаспорте и на заводской табличке;
- навесное оборудование должно иметь действующие сертификаты соответствия ТР ТС 012/2011, допускающие возможность их применения во взрывоопасных зонах; необходимо соблюдать специальные условия безопасного применения «X», указанные в сертификатах соответствия и руководствах по эксплуатации для навесного оборудования;
- при монтаже клапанов необходимо учитывать направление потока среды, обозначенное стрелкой на корпусе клапанов;
- клапаны следует встраивать в локальную систему уравнивания потенциалов во взрывоопасной зоне;

М.П.

**Руководитель (уполномоченное лицо) органа по сертификации** _____ (подпись) Овчинникова Вера Александровна (Ф.И.О.)

**Эксперт (эксперт-аудитор) (эксперты(эксперты-аудиторы))** _____ (подпись) Гоптаренко Вячеслав Юрьевич (Ф.И.О.)

Бланк изготовлен «КАОС», г. Нур-Султан

# ПРИЛОЖЕНИЕ

Серия KZ № 0116236

**К СЕРТИФИКАТУ СООТВЕТСТВИЯ** № ЕАЭС KZ 7500525.01.01.02386



- при эксплуатации клапанов, в зонах, опасных по воспламенению горючей пыли, требуется учитывать температуру окружающей среды; температура воспламенения пыли должна превышать температуру поверхности арматуры и её составных частей более чем в 1,5 раза, а температура тления осевшей пыли (максимальная допустимая толщина слоя пыли – 5 мм) должна быть выше температуры поверхности арматуры и её составных частей более чем на 75 К;
- при эксплуатации клапанов во взрывоопасных средах категории IIA, IIB, IIC требуется учитывать температуру окружающей среды и зависимость температурного класса от максимальной температуры рабочей среды, проходящей через изделие, указанную в таблице 2.

Таблица 2

| Температурный класс по ГОСТ 32407-2013 (ISO/DIS 80079-36) | Максимально допустимая температура рабочей среды[1)] |
|---|---|
| T6 | ≤ 80 °C |
| T5 | ≤ 95 °C |
| T4 | ≤ 130 °C |
| T3 | ≤ 195 °C |
| T2 | ≤ 290 °C |
| T1 | ≤ 440 °C |
| -[2)] | ≤ 600 °C |

[1)] определяется потребителем и указывается в Паспорте на конкретную арматуру, поставляемом потребителю.
[2)] температура самовоспламенения газа или пара (минимальная температура воспламенения), с которым возможен контакт поверхностей арматуры и её составных частей, должна превышать максимальную температуру рабочей среды.

Специальные условия применения, обозначенные «X», должны быть отражены в сопроводительной документации.

М.П.

**Руководитель (уполномоченное лицо) органа по сертификации** _____ (подпись) Овчинникова Вера Александровна (Ф.И.О.)

**Эксперт (эксперт-аудитор) (эксперты(эксперты-аудиторы))** _____ (подпись) Гоптаренко Вячеслав Юрьевич (Ф.И.О.)

Бланк изготовлен «КАОС», г. Нур-Султан

# 15 Appendix

## 15.1 Tightening torques, lubricants and tools

### 15.1.1 Tightening torques

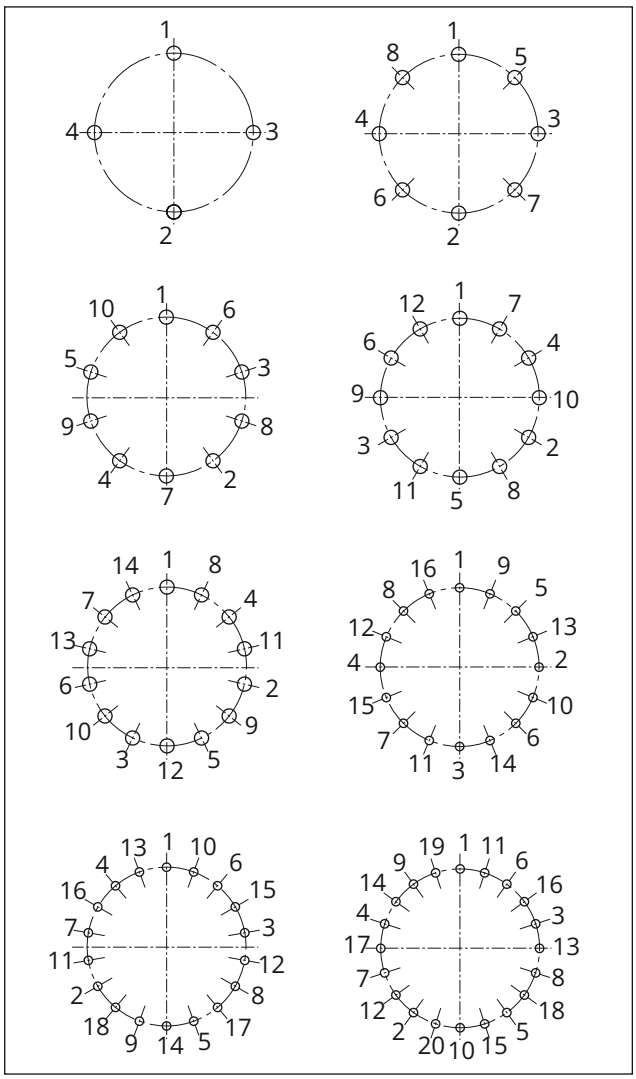


**Fig. 37:** *Tightening sequence depending on the number of bolts (4, 8, 10, 12, 14, 16, 18 and 20 bolts)*

**Table 9:** *Numerical tightening sequence of bolts numbered in the clockwise direction*

| Number of bolts | Tightening sequence of bolts numbered sequentially in the clockwise direction |
|---|---|
| 4 | 1, 3, 2, 4 |
| 6 | 1, 5, 3, 2, 6, 4 |
| 8 | 1, 5, 3, 7, 2, 6, 4, 8 |
| 10 | 1, 5, 3, 7, 9, 2, 6, 4, 8, 10 |
| 12 | 1, 5, 9, 3, 7, 11, 2, 6, 10, 4, 8, 12 |
| 14 | 1, 5, 9, 3, 7, 11, 13, 2, 6, 10, 4, 8, 12, 14 |
| 16 | 1, 5, 9, 13, 3, 7, 11, 15, 2, 6, 10, 14, 4, 8, 12, 16 |
| 18 | 1, 13, 5, 17, 9, 3, 15, 7, 11, 2, 14, 6, 18, 10, 4, 16, 8, 12 |
| 20 | 1, 13, 5, 17, 9, 3, 15, 7, 19, 11, 2, 14, 6, 18, 10, 4, 16, 8, 20, 12 |
| 22 | 1, 13, 5, 21, 9, 3, 15, 7, 19, 11, 17, 2, 14, 6, 22, 10, 4, 16, 8, 20, 12, 18 |
| 24 | 1, 9, 17, 5, 13, 21, 3, 11, 19, 7, 15, 23, 2, 10, 18, 6, 14, 22, 4 12, 20, 8, 16, 24 |
| 26 | 1, 9, 25, 5, 13, 21, 3, 11, 19, 7, 15, 23, 17, 2, 10, 26, 6, 14, 22, 4, 12, 20, 8, 16, 24, 18 |
| 28 | 1, 21, 5, 13, 25, 9, 17, 3, 23, 7, 15, 19, 11, 27, 2, 22, 6, 14, 26, 10, 18, 4, 24, 8, 16, 20, 12, 28 |
| 30 | 1, 21, 5, 13, 27, 9, 17, 3, 23, 7, 15, 19, 11, 25, 29, 2, 22, 6, 14, 26, 10, 18, 4, 24, 8, 16, 20, 12, 26, 30 |
| 32 | 1, 21, 5, 13, 25, 9, 17, 29, 3, 23, 7, 15, 19, 11, 27, 31, 2, 22, 6, 14, 26, 10, 18, 30, 4, 24, 8, 16, 20, 12, 28, 32 |

⇨ Tighten radially arranged pressure-retaining bolting gradually according to the prescribed tightening sequence. Apply the target torque over several rounds.

⇨ Use a torque wrench to apply and check the tightening torques.

#### Tightening torques sorted by parts

All tightening torques specified in Nm

**Table 10:** *Tightening torques to install the seat*

| Nominal size NPS | Tightening torque for retaining ring (221) for seat |
|---|---|
| ½ | 90 |
| 1 | 120 |
| 1½ | 200 |
| 2 | 440 |
| 3 | 1200 |
| 4 | 1700 |
| 6 | 5300 |
| 8 | 8900 |

**Table 11:** *Tightening torques for nuts (14) on valve bonnet (2/21/101)*

| Nominal size | Tightening torque for body nut (14) | | | |
|---|---|---|---|---|
| | Pressure rating Class ... | | | |
| NPS | 150 | 300 | 600 | 900 |
| ½ | 40 | 40 | 40 | 45 |
| 1 | 45 | 45 | 45 | 50 |
| 1½ | 70 | 75 | 75 | 80 |
| 2 | 90 | 95 | 95 | 150 |
| 3 | 155 | 165 | 175 | 360 |
| 4 | 175 | 185 | 220 | 330 |

| Nominal size | Tightening torque for body nut (14) | | | |
|---|---|---|---|---|
| | Pressure rating Class ... | | | |
| NPS | 150 | 300 | 600 | 900 |
| 6 | 410 | 420 | 340 | 570 |
| 8 | 690 | 690 | 1000 | – |
| 10 | 760 | 760 | 1190 | – |
| 12 | 660 | 660 | 1160 | – |

**Table 12:** *Tightening torques for plug/piston stem (36)*

| Stem diameter Ø in mm | Tightening torque for plug stem (36) in plug (5)/piston stem (36) in piston (5) |
|---|---|
| 12 | 25 |
| 16 | 30 |
| 25 | 35 |
| 40 | *) |

*) On request

**Table 13:** *Tightening torques for threaded bushing (8): Version with centrally fastened packing*

| Stem diameter Ø in mm | Packing form | | | | |
|---|---|---|---|---|---|
| | Adjustable (without internal spring) | | Live-loaded (with internal spring) | | |
| | GZA1 | PZA4 | PZS1 | PZS2 | PZS3 |
| 12 | – | – | 20 | 20 | – |
| 16 | – | – | 25 | 25 | – |
| 25 | – | – | 90 | 90 | – |
| 40 | – | – | 355 | 355 | – |

**Table 14:** *Tightening torques for packing nuts (163): Live-loaded packing with packing flange loaded by external spring elements*

| Stem diameter Ø in mm | Packing form | | | | | | |
|---|---|---|---|---|---|---|---|
| | PXS1 | PXS2 | PXS3 | GXS1 | GXS2 | GXS3 | PXS4 |
| 12 | *) | *) | – | *) | *) | *) | – |
| 16 | 9 to 11 | 9 to 11 | – | *) | *) | *) | – |
| 25 | 38 to 41 | 38 to 41 | – | *) | *) | *) | – |
| 40 | *) | *) | – | *) | *) | *) | – |

*) On request

**Table 15:** *Tightening torques for packing nuts (163): Live-loaded packing with packing flange without by spring elements*

| Stem diameter Ø in mm | Packing form | | | | |
|---|---|---|---|---|---|
| | PXA1 | GXA1 | GXA2 | GXA3 | PXA4 |
| 12 | – | Max. 18 | – | – | – |
| 16 | – | *) | – | – | – |
| 25 | – | *) | – | – | – |
| 40 | – | *) | – | – | – |

*) On request

**Table 16:** *Tightening torques for lock nuts (10) and stem connector nut (9)*

| NPS | Tightening torque for lock nuts (10) and stem connector nut (9) |
|---|---|
| 1 | 70 |
| 1½ to 6 | 120 |
| 8 to 12 | *) |

*) On request

## 15.1.2 Lubricants

**⚠ WARNING**

***Exposure to hazardous substances poses a serious risk to health.***

*Certain lubricants and cleaning agents are classified as hazardous substances. These substances have a special label and a material safety data sheet (MSDS) issued by the manufacturer.*

⇨ *Make sure that an MSDS is available for any hazardous substance used. If necessary, contact the manufacturer to obtain an MSDS.*

⇨ *Inform yourself about the hazardous substances and their correct handling.*

To minimize the friction in threaded joints, clean any dirty sliding surfaces on the joint and apply a suitable lubricant to them before tightening the joint. Optimum lubrication is achieved by lubricating all sliding surfaces (e.g. threads, seating surfaces on nuts, contact surfaces on moving bolt heads and washers, if used). This is required to achieve the required preload when applying the specified tightening torques. It also ensures that the threaded joint can still be undone without any problems after it has been exposed to thermal stress. Apply only a thin film of lubricant to the entire surface that needs lubrication.

⇨ Use lubricant as listed in the device bill of materials. Alternatively, contact our after-sales service for more information on the cleaning agents and lubricants to be used.

**Table 17:** *Recommended lubricant*

| Item[2)] | Application | Trade name | Temperature range in °C | Color | Material number |
|---|---|---|---|---|---|
| 113/ 242 | Chemical-resistant, high-temperature grease[1)]: e.g. lubricant for packings | Gleitmo® 591 | -25 to +260 | White | 8150-4000 (10 g) |
| | | | | | 8150-0111 (1 kg) |
| 114 | High-temperature lubricant (paste): item 13/14, item 32/33, item 8 (threaded bushing)[3)], item 92 | Gleitmo® 1763 V | -20 to +1000 | Gray | 8150-4008 (250 g) |
| | | | | | 100194184 (1 kg) |
| 243 | Special high-temperature anti-seize paste for bolted connections: items 221, 103 | Gleitmo® 165 | -40 to +1200 | Gray | 1000036865 (1 kg) |
| 113 | Fully synthetic special grease: Lubricant for packings | SYN-setral-IN-T/200 V-2 | -50 to +280 | White | 100141157 (100 g) |
| | | | | | 100141160 (1 kg) |

1) Parts that are to be lubricated and tools used for lubrication must be free of oil and grease.

2) According to device BOM

3) Depending on the application (process medium)

## 15.1.3 Tools

### Tools

In addition to the standard tool, special tools are required to assemble and remove some parts. Use adjustable torque wrenches with a stop signal or that indicate the torque being applied to achieve the right tightening torques. Valves in large nominal sizes often require tightening torques that can only be achieved through additional torque multiplication by using a torque multiplier or hydraulic power tool. Depending on the valve model and version, special tools may be required for certain procedures.

The required special tools can be purchased from SAMSON.

⇨ Contact our after-sales service.

## 15.2 Spare parts

1 Valve body
2 Standard bonnet
4 Seat
5 Plug/piston
7[1)2)] Bushing
8 Threaded bushing/packing follower
9 Stem connector nut
10 Lock nut
13 Stud
14 Hex nut
15 Packing set
17 Spiral gasket
21 Insulating section
22 Intermediate piece
26 Label for version with insulating sction or bellows seal (not shown)
32 Bolt
33 Nut
36 Plug stem/piston stem
37 Piston stem with metal bellows/piston stem with metal bellows
39 Spiral gasket
41 Bellows nut
42 Screw plug (test connection)
43 Gasket
45[2)] Seal (pressure balancing)
47[1)] Plug guide (version with pressure balancing)
60 Yoke including external anti-rotation fixture
62[3)] Flow divider
63[3)] Support element (version with screwed-in seat)
66[3)] Clamping ring for flow divider ST1
77 Direction of flow arrow (not shown)
80 Nameplate
81 Grooved pin
82 Screw
83 Hanger
84 Travel indicator scale
89 Dust shield
91 Protective caps on valve inlet/outlet
92 Castellated nut
93 Expansion sleeve
101 Valve bonnet (version with bellows seal)
103 Locking pin
105 Label for version with an adjustable packing (not shown)
113 Lubricant
114 Lubricant
124 Seat retainer (version with clamped-in seat)
126 Spiral gasket
127 Spiral gasket
162 Packing flange
163 Packing nuts for packing flange (including disk springs when packing flange is loaded by external spring elements)
164 Stud
182 Spiral wound gasket
221 Retaining ring for seat
223 Anti-rotation fixture (bellows seal)
242 Lubricant
243 Lubricant
324[2)] Seat retainer (pressure-balanced version with clamped-in seat)
363[2)3)] Support element (pressure-balanced version with screwed-in seat)
424 Cage
463 Cylinder (cage version)

1) Included in assembly with items 363 and 324
2) Version with balanced valve plug
3) Version with flow divider

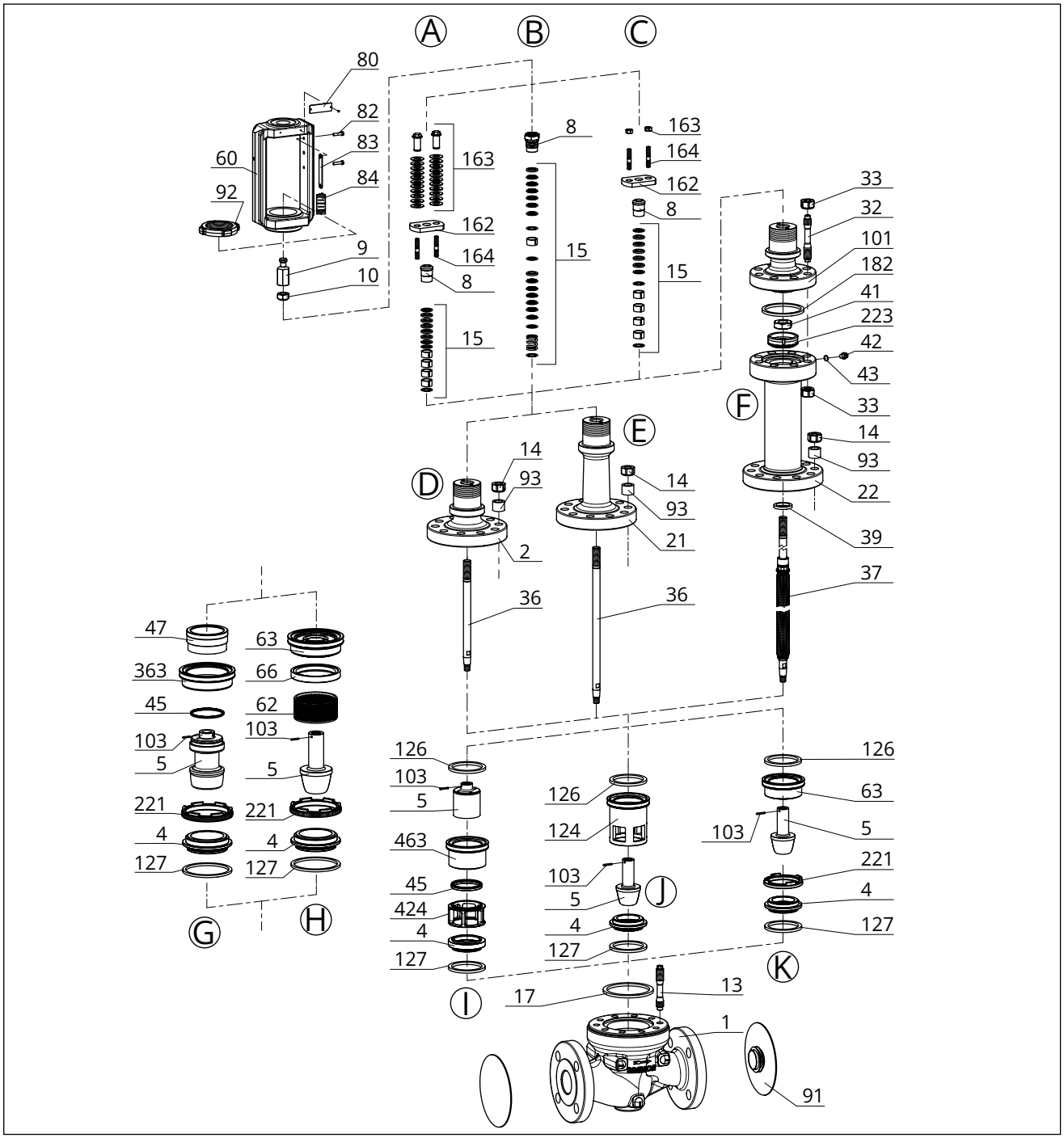


Ⓐ Packing with packing flange (live-loaded by external spring elements)
Ⓑ Centrally fastened packing (live-loaded or adjustable, depending on the packing set)
Ⓒ Packing with packing flange (adjustable without external spring elements)
Ⓓ Standard bonnet
Ⓔ Version with insulating section
Ⓕ Valves with bellows seal
Ⓖ Screwed-in seat and plug with pressure balancing
Ⓗ Screwed-in seat and plug with flow divider
Ⓘ Piston and cage
Ⓙ Clamped-in seat and plug
Ⓚ Screwed-in seat and plug

## 15.3 After-sales service

Contact our after-sales service for support concerning service or repair work or when malfunctions or defects arise.

### E-mail contact

You can reach our after-sales service at the following e-mail address:
aftersalesservice@samsongroup.com

### Addresses of SAMSON AG and its subsidiaries

The addresses of SAMSON AG, its subsidiaries, representatives and service facilities worldwide can be found in all SAMSON product catalogs or on our website (▶ www.samsongroup.com).

### Required specifications

Please submit the following details:

- Order number and position number in the order
- Type, model number, nominal size and valve version
- Pressure and temperature of the process medium
- Flow rate in $m^3/h$ or cu.ft/min
- Bench range of the actuator (e.g. 0.2 to 1 bar)
- Is a strainer installed?
- Installation drawing

SAMSON AKTIENGESELLSCHAFT
Weismüllerstraße 3 · 60314 Frankfurt am Main, Germany
Phone: +49 69 4009-0 · Fax: +49 69 4009-1507
samson@samsongroup.com · www.samsongroup.com

2026-08-28 | English | 4000466639 | 1.8