DATA SHEET

T 8004-GR EN

Series SMS · SMS MG-1 and SMS MG-7 Pneumatic Control Valves

Type 251GR Globe Valve

ANSI version

Application

Control valve for process engineering applications with high industrial requirements

Nominal size	**NPS ½ to 12**
Pressure rating	**Class 150 to 900**
Temperatures	**-58 to +1022 °F (-50 to +550 °C)**



Fig. 1: *SMS MG-1: Type 251GR Globe Valve with Type 3271 Pneumatic Actuator*

Type 251GR Globe Valve operated with

- Type 3271 Pneumatic Actuator (SMS MG-1 Control Valve)
- Type 3277 Pneumatic Actuator (SMS MG-7 Control Valve) for integral positioner attachment

Special features

- Plug and cage trim replaceable in the field
- Body made of cast steel
- Body made of cast stainless steel
- Soft seal
- Metal seal
- High-performance metal seal
- Balanced to handle high differential pressures

Optional with RFID tags with unique identification according to DIN SPEC 91406.

The control valves with their modular design can be equipped with various accessories, such as positioners, limit switches, solenoid valves and other devices according to DIN EN 60534-6-1[1)] and NAMUR Recommendation (see Information Sheet ▶ T 8350).

[1)] Accessories required. See associated actuator documentation.

A safety manual containing the safety-related data is optionally available for use in safety-instrumented systems (SIL requirements).

Versions

Operating temperature (medium temperature) with PTFE packing for temperatures from -20 to +482 °F (-29 to +250 °C), with graphite packing in combination with insulating section from -58 to

SAMSON AKTIENGESELLSCHAFT
Weismüllerstraße 3 · 60314 Frankfurt am Main, Germany
Phone: +49 69 4009-0 · samson@samsongroup.com · www.samsongroup.com

Edition April 2026

+1022 °F (-50 to +550 °C) or with bellows seal (independent from the packing version) up to +797 °F (+425 °C), nominal size NPS ½ to 12, Class 150 to 900 (see Table 1)

- **SMS MG-1** (Fig. 1) • Type 251GR Globe Valve and Type 3271 Actuator with 350 to 2800 cm² actuator area (see Data Sheets ▶ T 8310-1, ▶ T 8310-2 and ▶ T 8310-3)
- **SMS MG-7** • Type 251GR Globe Valve and Type 3277 Actuator with 350 to 750v2 cm² actuator area for integral positioner attachment (see Data Sheet ▶ T 8310-1)

Further versions

- **Valve plug with pressure balancing**
- **Additional handwheel** • See Data Sheet ▶ T 8310-1
- **Type 251GR Valve with Type 3273 Hand-operated Actuator** • For valves with max. 30 mm rated travel and side-mounted handwheel for travel >30 mm (see Data Sheet ▶ T 8312)
- **SMS MG-TP Electric Control Valve** • On request
- Version with **clamped-in** or **screwed-in seat** or with **cage trim**
- **Version with insulating section for high temperatures**
- **Version with bellows seal**

Principle of operation of version with clamped-in/screwed-in seat

The medium flows through the valve in the direction indicated by the arrow. The valve plug determines the cross-sectional area of flow.

The valves can be equipped with a flow divider ST1 for noise reduction (see Data Sheet ▶ T 8081).

Pressure balancing must be used when high pressures or differential pressures act on the plug.

Fig. 2 and Fig. 3 show configuration examples.

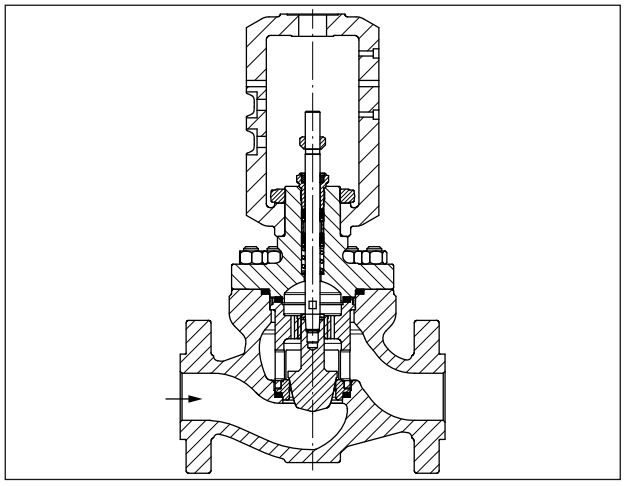

Fig. 2: *Type 251GR Globe Valve with clamped-in seat*

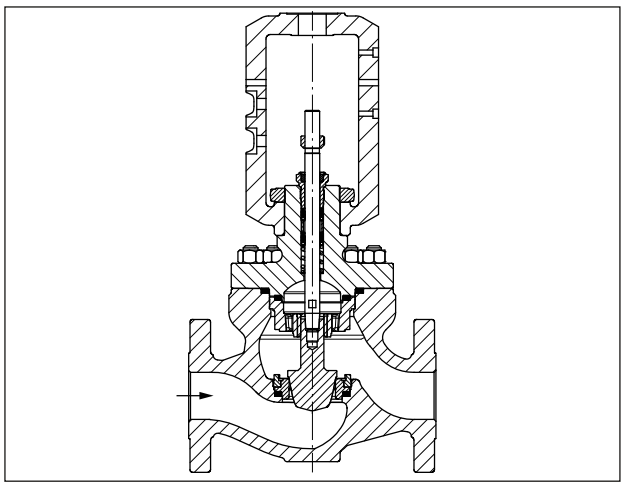

Fig. 3: *Type 251GR Globe Valve with screwed-in seat*

Principle of operation of cage version

The medium flows through the valve as indicated by the arrow on the valve body. A change in the pneumatic signal acting on the actuator changes the piston travel and how far the valve is opened as a result. The piston position and cage design determine the released cross-section and the flow rate with it.

Fig. 4 shows a configuration example.

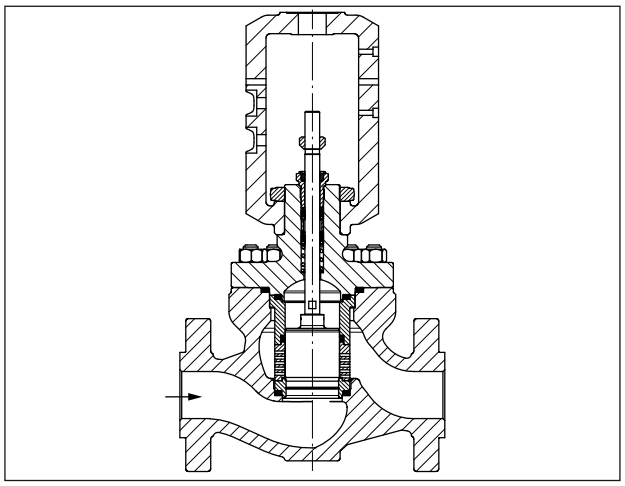

Fig. 4: *Type 251GR Globe Valve with cage trim*

All the trims shown in Fig. 2 to Fig. 4 are interchangeable in the field without any changes necessary to the pressure-bearing or pressure-retaining parts.

Fail-safe positions

Depending on how the springs are arranged in the Type 3271 or Type 3277 Pneumatic Actuator (see Data Sheets ▶ T 8310-1, ▶ T 8310-2 and ▶ T 8310-3), the valve has two different fail-safe positions that become effective when the supply air fails:

- **Actuator stem extends (fail-close):**
  The valve is closed upon air supply failure.
- **Actuator stem retracts (fail-open):**
  The valve is opened upon air supply failure.

Table 1: *Technical data for Type 251GR · ANSI version*

Material		**Cast steel A216 WCC**	**Cast steel A217 WC6**	**Cast stainless steel A351 CF8M**
Nominal size and pressure rating		Class 150/300/600: NPS ½ to 12 · Class 900: NPS ½ to 6[3]		
Type of end connections	Flanges	RF and RTJ according to ASME B16.5		
	Welding ends	According to ASME B16.25		
Seat-plug seal		Metal seal · High-performance metal seal		
Characteristic		Equal percentage · Linear · Mod. linear · On/off		
Rangeability		50:1		
Conformity		CE EAC[6]		
Optional RFID tag		Application range according to the technical specifications and the explosion protection certificates. These documents are available on our website: ▶ www.samsongroup.com > Products > Electronic nameplate The permissible range for temperatures at the RFID tag is between -40 and +185 °F (-40 and +85 °C).		
Temperature ranges in °F (°C) · Permissible operating pressures according to pressure-temperature diagrams (see Information Sheet ▶ T 8000-2)				
Body with standard bonnet		-20 to +482 (-29 to +250) with PTFE packing · Up to +797 (+425) with graphite packing		
Body with insulating section		-20 to +797 (-29 to +425)	-20 to +932 (-29 to +500)	-58 to +1022 (-50 to +550)
Body with bellows seal		-20 to +797 (-29 to +425)	-20 to +842 (-29 to +450)	-58 to +842 (-50 to +450)
Trim[1]	Metal seal	-58 to +1022 (-50 to +550)		
	Balanced with PTFE	-58 to +482 (-50 to +250)		
	Balanced, metal seal[4][5]	Room temperature up to +1022 (+550)		
Leakage class according to ANSI FCI 70-2				
Trim	Metal seal	Standard: IV · High-performance metal seal: V		
	Balanced, metal seal	With PTFE ring (standard): IV · High-performance metal seal: V		

1) Only in combination with suitable body material
2) The temperature limits (in °F and °C) are not directly converted temperatures.
3) Class 900 only for version with clamped-in seat or cage trim
4) Only for version with cage trim
5) Only up to NPS 4
6) Only up to NPS 8

Table 2: *Materials for Type 251GR · ANSI version*

Body of standard version		**Cast steel A216 WCC**			**Cast steel A217 WC6**			**Cast stainless steel A351 CF8M**
Valve bonnet		A216 WCC			A217 WC6			A351 CF8M
Plug stem		316/316L or XM-19-H						
Seal ring for balanced plug (plug/piston)		PTFE with carbon · Metal seal[7]						
Guide bushing		420[1]			420[1][6]			B574 N06455
Packing		PTFE packing loaded by internal or external springs or adjustable graphite packing						
Body gasket		Spiral wound gasket, graphite/316L						
Version with screwed-in seat and plug	Plug[3]	410[2]	420[1]	316/316L[2]	410[2]	420[1]	316/316L[2]	316/316L[2]
	Seat	410[2]	420[1]	316/316L[2]	410[2]	420[1]	316/316L[2]	316/316L[2]
	Seat fastening	CA6NM-B			CA6NM-B			CF3M
Version with clamped-in seat and plug	Plug[3]	410[2]	420[1]	316/316L[2]	410 2[2]	420[1]	316/316L[2]	316/316L[2]
	Seat	410[2]	420[1]	316/316L[2]	410 2[2]	420[1]	316/316L[2]	316/316L[2]
	Seat fastening	CA6NM-B			CA6NM-B			CF8M
Version with piston and cage	Piston	410 2[1]	420[1]	316/316L[4][5]	410 2[1]	420[1]	316/316L[4][5]	316/316L[4][5]
	Cage	410 2[1]	420[1]	316/316L	410 2[1]	420[1]	316/316L	316/316L
	Seat	410 2[1]	420[1]	316/316L[2]	410 2[1]	420[1]	316/316L[2]	316/316L[2]
	Cylinder	410 2[1]	420[1]	316/316L	410 2[1]	420[1]	316/316L	316/316L

1) Heat treated

2) Also with Stellite®-faced facing

3) Plug made of Stellite® 6 (up to seat bore Ø ≤55 mm) available

4) Hard chrome-plated guiding surface

5) Guiding surface also Stellite® faced when the facing is Stellite®-faced

6) T >932 °F (>500 °C): Made of N06625

7) Only for version with cage trim

Fatigue resistance of bellows

SAMSON has calculated the service life of metal bellows for full or partial strokes depending on the material. These values can help determine maintenance intervals. Maintenance intervals may vary due to the operating conditions of the actual plant (especially the pressure and temperature of the process medium).

Table 3: *Load cycles of metal bellows · Valve with pressure rating Class 300/PN 40*

Nominal size		Travel	Pressure rating Class 300/PN 40					
			Material: 1.4571			Material: 2.4819		
			Number of load cycles[1] for …					
			Operating pressure 40 bar/580 psi at 20 °C/68 °F		Operating pressure 10.3 bar/ 150 psi	Operating pressure 40 bar/580 psi at 20 °C/68 °F		Operating pressure 10.3 bar/ 150 psi
NPS	DN	mm	Full strokes	Partial strokes (40 % of the full stroke)	Full strokes	Full strokes	Partial strokes (40 % of the full stroke)	Full strokes
½ to 1½	15 to 40	15	400,000	>100 million	700,000	70,000	15 million	100,000
		19	90,000	100 million	150,000	30,000	600,000	35,000
2	50	15	1 million	>20 million	*)	200,000	>30 million	*)
		19	300,000	>20 million	*)	90,000	30 million	*)
		30	20,000	20 million	35,000	19,000	400,000	25,000
3 to 4	80 to 100	15	20 million	>1 billion	*)	300,000	>500,000	*)
		30	70,000	1 billion	100,000	30,000	500,000	50,000
		38	15,000	15 million	20,000	14,000	290,000	19,000
6	150	60	80,000	1 billion	140,000	70,000	4 million	*)

*) On request

1) The specified values are calculated and only serve as a reference. The actual values may differ depending on the application. SAMSON does not assume any liability or warranty in this case.

Table 4: *Load cycles of metal bellows · Valve with pressure rating Class 600/PN 100*

Nominal size		Travel	Pressure rating Class 600/PN 100					
			Material: 1.4571			Material: 2.4819		
			Number of load cycles[1] for …					
			Operating pressure 100 bar/1450 psi at 20 °C/68 °F		Operating pressure 10,3 bar/ 150 psi	Operating pressure 100 bar/1450 psi at 20 °C/68 °F		Operating pressure 10,3 bar/ 150 psi
NPS	DN	mm	Full strokes	Partial strokes (40 % of the full stroke)	Full strokes	Full strokes	Partial strokes (40 % of the full stroke)	Full strokes
½ to 1½	15 to 40	15	200,000	>100 million	700,000	45,000	800,000	100,000
		19	50,000	100 million	150,000	25,000	400,000	35,000
2	50	15	450,000	>1 million	*)	120,000	10 million	*)
		19	150,000	>1 million	*)	60,000	700,000	*)
		30	11,000	1 million	35,000	14,000	20,000	25,000
3 to 4	80 to 100	15	1 million	>60 million	*)	150,000	>280,000	*)
		30	40,000	60 million	100,000	20,000	280,000	50,000
		38	10,000	1 million	20,000	9,000	150,000	19,000
6	150	60	35,000	1 million	140,000	45,000	550,000	*)

*) On request

1) The specified values are calculated and only serve as a reference. The actual values may differ depending on the application. SAMSON does not assume any liability or warranty in this case.

C_V and K_{VS} coefficients for version with plug[1] • Equal percentage or linear

Terms for control valve sizing according to DIN IEC 60534-2-1 and DIN IEC 60534-2-2: F_L = 0.95, x_T = 0.75

[1] Parabolic plug (standard) • Values for other plug versions on request • Perforated plug: See Data Sheet ▶ T 8086

Table 5: *Version with screwed-in seat (equal percentage or linear)*

C_V		**0.3**	**0.5**	**0.75**	**1.1**	**2**	**3**	**5**	**8**	**15**	**24**	**37**	**54**	**85**	**128**	**220**	**315**	**465**	**810**
K_{VS}		**0.26**	**0.43**	**0.65**	**0.95**	**1.7**	**2.6**	**4.3**	**6.9**	**13**	**21**	**32**	**47**	**74**	**110**	**190**	**273**	**400**	**700**
C_V-1		–	–	–	–	1.8	2.7	4.5	7.2	14	22	34	49	76	116	200	284	420	730
K_{VS}-1		–	–	–	–	1.6	2.3	3.9	6.2	12	19	29	42	66	100	171	245	363	630
Seat bore	mm	4[1]	6[1]	6[1]	6[1]	12	12	24	24	27	33	42	55	70	85	110	130	170	228
Travel	mm	15	15	15	15	15	15	15	15	15	19	19	30	38	38	60	60	60	90

[1] Facing diameter = 8 mm (decisive for actuator sizing)

Table 6: *Versions without flow divider (screwed-in seat)*

C_V		**0.3**	**0.5**	**0.75**	**1.1**	**2**	**3**	**5**	**8**	**15**	**24**	**37**	**54**	**85**	**128**	**220**	**315**	**465**	**810**
K_{VS}		**0.26**	**0.43**	**0.65**	**0.95**	**1.7**	**2.6**	**4.3**	**6.9**	**13**	**21**	**32**	**47**	**74**	**110**	**190**	**273**	**400**	**700**
NPS	DN																		
½	15	•	•	•	•	•	•	•											
1	25			•	•	•	•	•	•	•									
1½	40					•	•	•	•	•	•	•							
2	50									•	•	•	•						
3	80											•	•	•	•				
4	100												•	•	•	•			
6	150														•	•	•	•	
8	200															•	•	•	•

Table 7: *Versions with flow divider ST1 (C_V-1/K_{VS}-1) (screwed-in seat)*

C_V-1		**–**	**–**	**–**	**–**	**1.8**	**2.7**	**4.5**	**7.2**	**14**	**22**	**34**	**49**	**76**	**116**	**200**	**284**	**420**	**730**
K_{VS}-1		**–**	**–**	**–**	**–**	**1.6**	**2.3**	**3.9**	**6.2**	**12**	**19**	**29**	**42**	**66**	**100**	**171**	**245**	**363**	**630**
NPS	DN																		
½	15					•	•	•											
1	25					•	•	•	•	•									
1½	40					•	•	•	•	•	•	•							
2	50									•	•	•	•						
3	80											•	•	•	•				
4	100												•	•	•	•			
6	150														•	•	•	•	
8	200															•	•	•	•

Table 8: *Version with clamped-in seat (equal percentage or linear)*

C_V		0.3	0.5	0.75	1.1	2	3	4.5	5	8	14	15	24	34	37	49	54	85	116	128	200	220	315	420	465	730	810	1270	1740
K_{VS}		**0.26**	**0.43**	**0.65**	**0.95**	**1.7**	**2.6**	**3.9**	**4.3**	**6.9**	**12**	**13**	**21**	**29**	**32**	**42**	**47**	**74**	**100**	**110**	**171**	**190**	**273**	**363**	**400**	**630**	**700**	**1100**	**1500**
Seat bore	mm	4[1)]	6[1)]	6[1)]	6[1)]	12	12	24	24	24	24	27	33	42	42	55	55	70	85	85	110	110	130	170	170	228	228	280	330
Travel	mm	15	15	15	15	15	15	15	15	15	15	15	19	19	19	30	30	38	38	38	60	60	60	60	60	90	90	120	150

1) Facing diameter = 8 mm (decisive for actuator sizing)

Table 9: *Versions without flow divider (clamped-in seat)*

C_V		0.3	0.5	0.75	1.1	2	3	4.5	5	8	14	15	24	34	37	49	54	85	116	128	200	220	315	420	465	730	810	1270	1740
K_{VS}		**0.26**	**0.43**	**0.65**	**0.95**	**1.7**	**2.6**	**3.9**	**4.3**	**6.9**	**12**	**13**	**21**	**29**	**32**	**42**	**47**	**74**	**100**	**110**	**171**	**190**	**273**	**363**	**400**	**630**	**700**	**1100**	**1500**
NPS	DN																												
½	15	•	•	•	•	•	•	•																					
1	25			•	•	•	•		•	•	•																		
1½	40					•	•		•	•		•	•	•															
2	50											•	•		•	•													
3	80														•		•	•	•										
4	100																•	•		•	•								
6	150																			•		•	•	•					
8	200																					•	•		•	•			
10	250																								•		•	•	
12	300																										•	•	•

C_V and K_{VS} coefficients for version with cage • Equal percentage or linear

Table 10: *Version with cage (equal percentage or linear)*

		Cage with full flow rate								
C_V		**17**	**37**	**60**	**136**	**225**	**475**	**835**	**1215**	**1800**
K_{VS}		**14.5**	**32**	**52**	**118**	**195**	**410**	**720**	**1050**	**1550**
Trim		$1^5/_{16}$"	$1^7/_8$"	$2^5/_{16}$"	3½"	4½"	7"	9"	11"	13"
Travel	mm	19	19	30	38	60	75	90	120	150

Table 11: *Version with cage (equal percentage or linear)*

		Cage with reduced flow rate								
C_V		**11**	**24**	**42**	**95**	**146**	**335**	**600**	**850**	**1270**
K_{VS}		**9.4**	**21**	**36**	**82**	**126**	**290**	**520**	**735**	**1100**
Trim		$1^5/_{16}$"	$1^7/_8$"	$2^5/_{16}$"	3½"	4½"	7"	9"	11"	13"
Travel	mm	19	19	30	38	60	75	90	120	150

Table 12: *Versions with cage • FTO (Flow to open)*

		Cage with full flow rate									Cage with reduced flow rate								
C_V		**17**	**37**	**60**	**136**	**225**	**475**	**835**	**1215**	**1800**	**11**	**24**	**42**	**95**	**146**	**335**	**600**	**850**	**1270**
K_{VS}		**14.5**	**32**	**52**	**118**	**195**	**410**	**720**	**1050**	**1550**	**9.4**	**21**	**36**	**82**	**126**	**290**	**520**	**735**	**1100**
NPS	DN																		
1	25	•									•								
1½	40		•									•							
2	50			•									•						
3	80				•									•					
4	100					•									•				
6	150						•									•			
8	200							•									•		
10	250								•									•	
12	300									•									•

C_V and K_{VS} coefficients for version with flow divider cage FDC1 • Equal percentage, linear or modified linear

Table 13: *Version with cage FDC1 (equal percentage)*

		Cage with full flow rate								
C_V-FDC1		**14**	**30**	**49**	**110**	**178**	**382**	**676**	**985**	**1460**
K_{VS}-FDC1		**12**	**26**	**42**	**95**	**154**	**330**	**585**	**850**	**1260**
Trim		$1^5/_{16}$"	$1^7/_8$"	$2^5/_{16}$"	3½"	4½"	7"	9"	11"	13"
Seat bore	mm	31.34	45.63	56.74	86.98	112.38	176.15	227	277.4	328.2
Cage inside Ø	mm	33.34	47.63	58.74	88.98	114.38	177.98	228.8	279.6	330.4
Travel	mm	19	19	30	38	60	75	90	120	150

Table 14: *Version with cage FDC1 (equal percentage)*

		Cage with reduced flow rate								
C_V-FDC1		**10**	**20**	**34**	**76**	**123**	**266**	**475**	**676**	**1020**
K_{VS}-FDC1		**8.5**	**17**	**29**	**66**	**106**	**230**	**410**	**585**	**880**
Trim		$1^5/_{16}$"	$1^7/_8$"	$2^5/_{16}$"	3½"	4½"	7"	9"	11"	13"
Seat bore	mm	31.34	45.63	56.74	86.98	112.38	176.15	227	277.4	328.2
Cage inside Ø	mm	33.34	47.63	58.74	88.98	114.38	177.98	228.8	279.6	330.4
Travel	mm	19	19	30	38	60	75	90	120	150

Table 15: *Versions with cage FDC1 (C_V-FDC1/K_{VS}-FDC1) • (equal percentage)*

		Cage with full flow rate									Cage with reduced flow rate								
C_V-FDC1		**14**	**30**	**49**	**110**	**178**	**382**	**676**	**985**	**1460**	**10**	**20**	**34**	**76**	**123**	**266**	**475**	**676**	**1020**
K_{VS}-FDC1		**12**	**26**	**42**	**95**	**154**	**330**	**585**	**850**	**1260**	**8.5**	**17**	**29**	**66**	**106**	**230**	**410**	**585**	**880**
NPS	DN																		
1	25	•									•								
1½	40		•									•							
2	50			•									•						
3	80				•									•					
4	100					•									•				
6	150						•									•			
8	200							•									•		
10	250								•									•	
12	300									•									•

Table 16: *Version with cage FDC1 (linear)*

		Cage with full flow rate								
C_V-FDC1		**15**	**34**	**54**	**123**	**200**	**432**	**760**	**1092**	**1620**
K_{VS}-FDC1		**13**	**29**	**47**	**106**	**171**	**370**	**650**	**945**	**1400**
Trim		$1^5/_{16}$"	$1^7/_8$"	$2^5/_{16}$"	3½"	4½"	7"	9"	11"	13"
Seat bore	mm	31.34	45.63	56.74	86.98	112.38	176.15	227	277.4	328.2
Cage inside Ø	mm	33.34	47.63	58.74	88.98	114.38	177.98	228.8	279.6	330.4
Travel	mm	19	19	30	38	60	75	90	120	150

Table 17: *Version with cage FDC1 (linear)*

		Cage with reduced flow rate								
C_V-FDC1		**11**	**22**	**37**	**85**	**136**	**300**	**526**	**760**	**1145**
K_{VS}-FDC1		**9.4**	**19**	**32**	**74**	**118**	**260**	**455**	**650**	**990**
Trim		$1^5/_{16}$"	$1^7/_8$"	$2^5/_{16}$"	3½"	4½"	7"	9"	11"	13"
Seat bore	mm	31.34	45.63	56.74	86.98	112.38	176.15	227	277.4	328.2
Cage inside Ø	mm	33.34	47.63	58.74	88.98	114.38	177.98	228.8	279.6	330.4
Travel	mm	19	19	30	38	60	75	90	120	150

Table 18: *Versions with cage FDC1 (C_V-FDC1/K_{VS}-FDC1) • (linear)*

		Cage with full flow rate									Cage with reduced flow rate								
C_V-FDC1		**15**	**34**	**54**	**123**	**200**	**432**	**760**	**1092**	**1620**	**11**	**22**	**37**	**85**	**136**	**300**	**526**	**760**	**1145**
K_{VS}-FDC1		**13**	**29**	**47**	**106**	**171**	**370**	**650**	**945**	**1400**	**9.4**	**19**	**32**	**74**	**118**	**260**	**455**	**650**	**990**
NPS	DN																		
1	25	•									•								
1½	40		•									•							
2	50			•									•						
3	80				•									•					
4	100					•									•				
6	150						•									•			
8	200							•									•		
10	250								•									•	
12	300									•									•

Table 19: *Version with cage FDC1 (mod. lin)*

C_V-FDC1		**17**	**37**	**60**	**136**	**225**	**475**	**835**	**1215**	**1800**
K_{VS}-FDC1		**14.5**	**32**	**52**	**118**	**195**	**410**	**720**	**1050**	**1550**
Trim		$1^5/_{16}$"	$1^7/_8$"	$2^5/_{16}$"	3½"	4½"	7"	9"	11"	13"
Seat bore	mm	31.34	45.63	56.74	86.98	112.38	176.15	227	277.4	328.2
Cage inside Ø	mm	33.34	47.63	58.74	88.98	114.38	177.98	228.8	279.6	330.4
Travel	mm	19	19	30	38	60	75	90	120	150

Table 20: *Versions with cage FDC1 (C_V-FDC1/K_{VS}-FDC1) • (modified linear)*

C_V-FDC1		**17**	**37**	**60**	**136**	**225**	**475**	**835**	**1215**	**1800**
K_{VS}-FDC1		**14.5**	**32**	**52**	**118**	**195**	**410**	**720**	**1050**	**1550**
NPS	DN									
1	25	•								
1½	40		•							
2	50			•						
3	80				•					
4	100					•				
6	150						•			
8	200							•		
10	250								•	
12	300									•

Table 21: *Dimensions in inch and mm for SMS MG-1 and SMS MG-7 Control Valves*

Valve		NPS	½	1	1½	2	3	4	6	8	10	12
Length L (RF flanges)	Class 150	in	7.25	7.25	8.75	10	11.75	13.88	17.75	21.38	26.5	29.02
		mm	184	184	222	254	298	352	451	543	673	737
	Class 300	in	7.5	7.75	9.25	10.5	12.5	14.5	18.62	22.38	27.87	30.51
		mm	190	197	235	267	318	368	473	568	708	775
	Class 600	in	8	8.25	9.88	11.25	13.25	15.5	20	24	29.61	32.24
		mm	203	210	251	286	337	394	508	610	752	819
	Class 900	in	11.5	11.5	13.12	14.75	17.38	20.12	28.12	–	–	–
		mm	292	292	333	375	441	511	714	–	–	–
Length L (RTJ flanges)	Class 600	in	7.94	8.25	9.88	11.37	13.37	15.62	20.12	24.12	29.72	32.36
		mm	201	210	251	289	340	397	511	613	755	822
	Class 900	in	11.5	11.5	13.12	14.87	17.5	20.24	28.24	–	–	–
		mm	292	292	333	378	444	514	717	–	–	–
Length L (welding ends)	Class 150 to 600	in	8	8.25	9.88	11.25	13.25	15.5	20	24	29.61	32.36
		mm	203	210	251	286	337	394	508	610	752	819
	Class 900	in	11	11	13	14.75	18.12	20.87	30.25	–	–	–
		mm	279	279	330	375	460	530	768	–	–	–
Height H4 **standard version**		in	6.3	6.3	6.3	7.32	8.27	9.61	12.56	15.94	20.47	23.31
		mm	160	160	160	186	210	244	319	405	520	592
Height H4 with **insulating section**		in	8.86	8.86	10.04	11.42	12.4	14.76	20.87	24.02	32.68	35.43
		mm	225	225	255	290	315	375	530	610	830	900
Height H4 with **bellows seal**		in	15.98	15.98	15.71	18.27	22.05	22.64	33.46	[2]	–	–
		mm	406	406	399	464	560	575	850	[2]	–	–
H8 for actuator	350 cm²	in	11.26	11.26	11.26	11.26	11.26	11.26	–	–	–	–
		mm	286	286	286	286	286	286	–	–	–	–
	350v2 cm²	in	11.26	11.26	11.26	11.26	11.26	11.26	–	–	–	–
		mm	286	286	286	286	286	286	–	–	–	–
	355v2 cm²	in	11.26	11.26	11.26	11.26	11.26	11.26	19.8	–	–	–
		mm	286	286	286	286	286	286	503	–	–	–
	750 cm²	in	11.26	11.26	11.26	11.26	11.26	11.26	19.8	–	–	–
		mm	286	286	286	286	286	286	503	–	–	–
	1000 cm²	in	13.43	13.43	13.43	13.43	13.43	13.43[3] 17.17[4]	19.8	19.8	23.15	–
		mm	341	341	341	341	341	341[3] 436[4]	503	503	588	–
	1400-60 cm²	in	13.43	13.43	13.43	13.43	13.43	13.43[3] 17.17[4]	19.8	19.8	23.15	–
		mm	341	341	341	341	341	341[3] 436[4]	503	503	588	–
	1400-120 cm²	in	–	–	–	20.71	20.71	20.71	23.15 28.94[6]	23.15 28.94[6]	28.94	28.94
		mm	–	–	–	526	526	526	588 735[6]	588 735[6]	735	735
	2800 cm²	in	–	–	–	20.71	20.71	20.71	23.15 28.94[6]	23.15 28.94[6]	28.94	28.94
		mm	–	–	–	526	526	526	588 735[6]	588 735[6]	735	735
	2x 2800 cm²	in	–	–	–	20.71	20.71	20.71	23.15 28.94[6]	23.15 28.94[6]	28.94	28.94
		mm	–	–	–	526	526	526	588 735[6]	588 735[6]	735	735

Valve		NPS	½	1	1½	2	3	4	6	8	10	12
H2[1]	Cl 150 to 300	in	1.73	2	2.44	2.97	4.15	5.47	7.28	8.46	9.84	10.87
		mm	44	51	62	75.5	105.5	139	185	215	250	276
	Cl 600	in	1.73	2	2.44	2.97	4.15	5.59	7.28	8.46	10.98	12.13
		mm	44	51	62	75.5	105.5	142	185	215	279	308
	Class 900	in	1.73	2.24	2.44	3.05	4.19	5.98	7.83	8.46	–	–
		mm	44	57	62	77.5	106.5	152	199	215	–	–

1) The H2 dimension is the distance from the middle of the flow channel to the bottom of the valve body. The dimension up to the bottom of the flange may differ. It may be lower or higher. Flange standards (see Table 1).

2) On request

3) With 30 or 38 mm travel

4) With 60 mm travel

6) With 60, 75 or 90 mm travel

Table 22: *Further dimensions[1] in combination with Type 3271 Pneumatic Actuator or Type 3277 Pneumatic Actuator*

Actuator area		cm²	350	350v2	355v2	750v2	1000	1400-60	1400-120	2800	2x 2800
Diaphragm ØD		in	11.02	11.02	11.02	15.51	18.19	20.87	21.02	30.32	30.32
Diaphragm ØD		mm	280	280	280	394	462	530	534	770	770
H[2]	Type 3271	in	3.23	3.62	5.16	9.29	15.87	13.27	23.54	28.07	47.76
H[2]	Type 3271	mm	82	92	131	236	403	337	598	713	1213
H[2]	Type 3277	in	3.23	3.23	4.76	9.29	–	–	–	–	–
H[2]	Type 3277	mm	82	82	121	236	–	–	–	–	–
H3[3]		in	4.33	4.33	4.33	7.48	24.02	24.02	25.59	25.59	25.59
H3[3]		mm	110	110	110	190	610	610	650	650	650
H5	Type 3277	in	3.98	3.98	3.98	3.98	–	–	–	–	–
H5	Type 3277	mm	101	101	101	101	–	–	–	–	–
Thread	Type 3271		M30x1.5	M30x1.5	M30x1.5	M30x1.5	M60x1.5	M60x1.5	M100x2	M100x2	M100x2
Thread	Type 3277		M30x1.5	M30x1.5	M30x1.5	M30x1.5	–	–	–	–	–
a	Type 3271		G ⅜ (⅜ NPT)	G ⅜ (⅜ NPT)	G ⅜ (⅜ NPT)	G ⅜ (⅜ NPT)	G ¾ (¾ NPT)	G ¾ (¾ NPT)	G 1 (1 NPT)	G 1 (1 NPT)	G 1 (1 NPT)
a2	Type 3277		G ⅜[4]	G ⅜[4]	G ⅜[4]	G ⅜[4]	–	–	–	–	–

1) The specified dimensions are theoretical maximum design values for a specific standard device configuration. They do not reflect every possible case of use. The actual values for individual devices may differ depending on the device configuration and the specific application.

2) Height including lifting eyelet or female thread and eyebolt according to DIN 580. Height of the swivel hoist may differ. Actuators up to 355v2 cm² without lifting eyelet or female thread.

3) Minimum clearance required to remove the actuator

4) An adapter G ⅜ to ⅜ NPT is available for the a2 connection. It can be ordered separately using the following article number: 100160362

Dimensional drawings

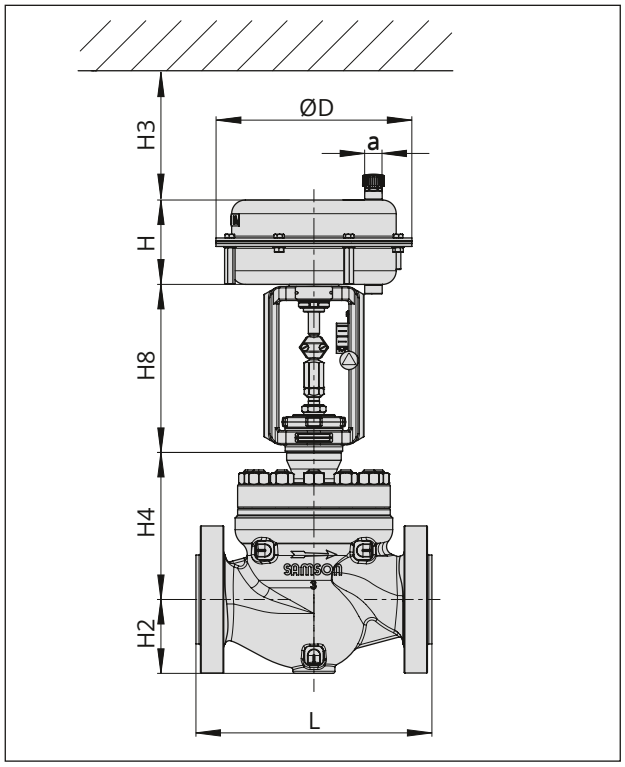

Fig. 5: *SMS MG-1 Control Valve: Type 251GR Valve with Type 3271 Pneumatic Actuator*

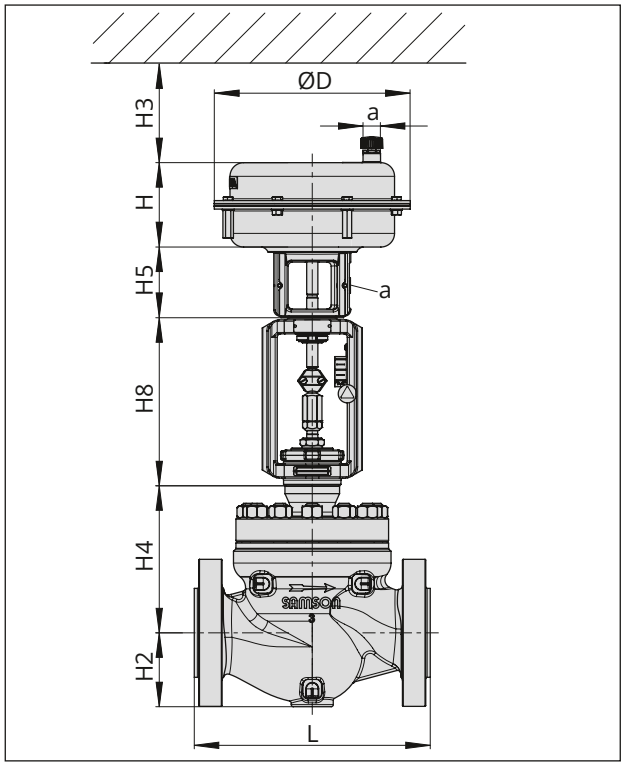

Fig. 6: *SMS MG-7 Control Valve: Type 251GR Valve with Type 3277 Pneumatic Actuator*

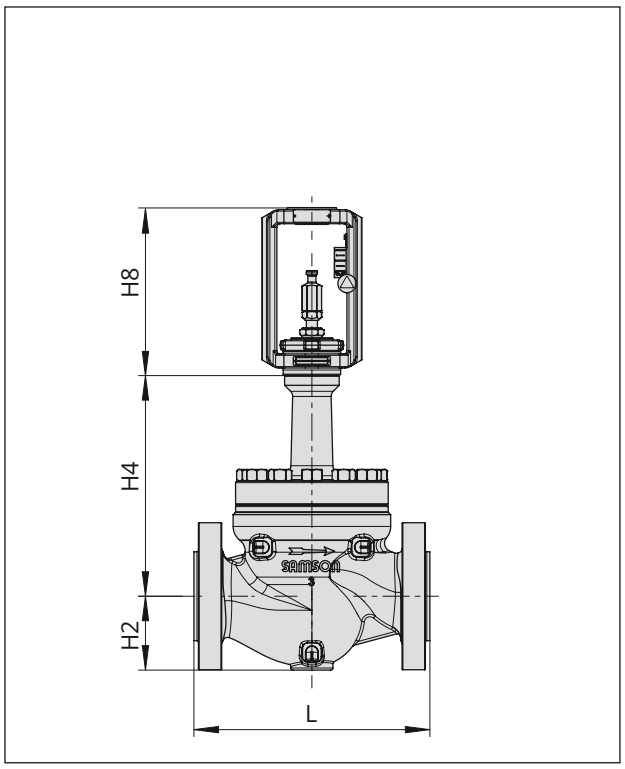

Fig. 7: *Type 251GR Valve with insulating section*

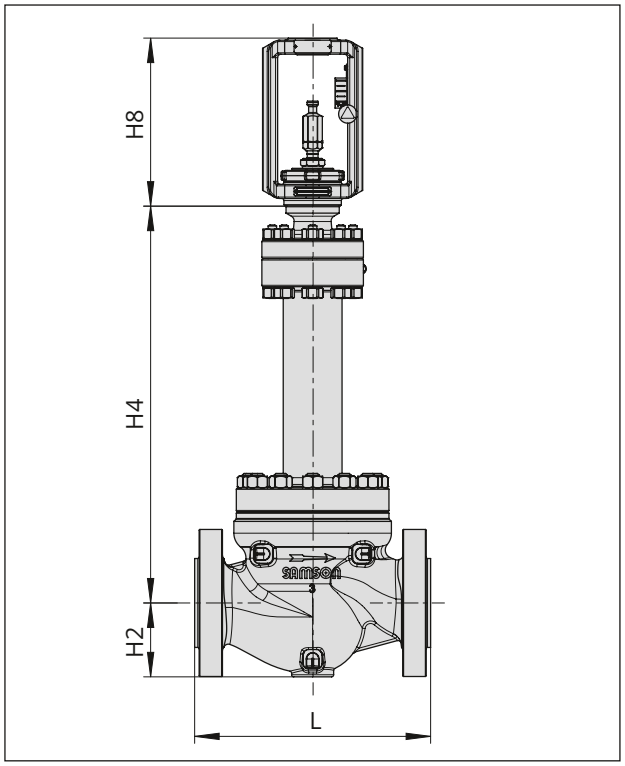

Fig. 8: *Type 251GR Valve with bellows seal*

Table 23: *Weights in lbs and kg for Type 251GR Valve with RF flanges according to ASME B16.5*

Valve		NPS	½	1	1½	2	3	4	6	8	10	12
Standard version (standard bonnet)												
Valve[1] without actuator	Cl 150	lbs (approx.)	20	29	37	64	101	148	298	511	819	1227
		kg (approx.)	9	13	17	29	46	67	135	232	371	557
	Cl 300	lbs (approx.)	22	33	46	68	112	174	355	589	961	1422
		kg (approx.)	10	15	21	31	51	79	161	267	436	645
	Cl 600	lbs (approx.)	22	33	49	75	128	225	470	820	1389	1932
		kg (approx.)	10	15	22	34	58	102	213	372	630	876
	Cl 900	lbs (approx.)	33	46	66	119	194	298	681	–	–	–
		kg (approx.)	15	21	30	54	88	135	309	–	–	–
Version with insulating section												
Valve[1] without actuator	Cl 150	lbs (approx.)	24	33	44	68	115	168	355	589	885	1296
		kg (approx.)	11	15	20	31	52	76	161	267	401	588
	Cl 300	lbs (approx.)	24	35	51	75	128	196	417	672	1027	1491
		kg (approx.)	11	16	23	34	58	89	189	305	466	676
	Cl 600	lbs (approx.)	26	37	53	82	132	231	500	851	1460	2000
		kg (approx.)	12	17	24	37	60	105	227	386	662	907
	Cl 900	lbs (approx.)	37	51	71	123	198	304	712	–	–	–
		kg (approx.)	17	23	32	56	90	138	323	–	–	–
Version with bellows seal												
Valve[1] without actuator	Cl 150	lbs (approx.)	–	29	37	60	93	146	282	467	–	–
		kg (approx.)	–	13	17	27	42	66	128	212	–	–
	Cl 300	lbs (approx.)	–	33	44	64	106	174	346	551	–	–
		kg (approx.)	–	15	20	29	48	79	157	250	–	–
	Cl 600	lbs (approx.)	–	35	49	71	112	201	414	688	–	–
		kg (approx.)	–	16	22	32	51	91	188	312	–	–
	Cl 900	lbs (approx.)	–	–	–	–	–	–	–	–	–	–
		kg (approx.)	–	–	–	–	–	–	–	–	–	–

[1] The weights specified apply to a specific standard device configuration. Weights of other valve configurations may differ depending on the version (material, trim etc.).

Table 24: *Weights[1] for Type 3271 and Type 3277 Pneumatic Actuators*

Type ... Actuator	Actuator area in cm²		350	350v2	355v2	750v2	1000	1400-60	1400-120	2800	2x 2800
3271	Without handwheel	lbs	18	26	33	79	176	154	386	992	2095
3271	Without handwheel	kg	8	11.5	15	36	80	70	175	450	950
3271	With handwheel	lbs	29	37	44	90	397	386	661[2]/ 937[3]	1268[2]/ 1544[3]	*)
3271	With handwheel	kg	13	16.5	20	41	180	175	300[2]/ 425[3]	575[2]/ 700[3]	*)
3277	Without handwheel	lbs	27	33	42	89	–	–	–	–	–
3277	Without handwheel	kg	12	15	19	40	–	–	–	–	–
3277	With handwheel	lbs	38	44	53	100	–	–	–	–	–
3277	With handwheel	kg	17	20	24	45	–	–	–	–	–

*) On request

[1] The weights specified apply to a specific standard device configuration. Weights of other actuator configurations may differ depending on the version (material, number of actuator springs etc.).

[2] Side-mounted handwheel up to 80 mm travel

[3] Side-mounted handwheel with travel higher than 80 mm travel

Selection and sizing of the valve

1. Calculate C_V coefficient according to DIN EN 60534-1.
2. Select nominal size NPS and C_V coefficient.
3. Calculation of permissible differential pressure Δp on request
4. Select the valve body material from Table 1 and Table 2 as well as from the pressure-temperature diagrams (see Information Sheet ▶ T 8000-2).
5. Select accessories from Table 1 and Table 2.

Ordering text

The following specifications are required on ordering:

Nominal size	NPS ...
Pressure rating	Class ...
Body material	See Table 2
Bonnet	Standard bonnet, insulating section or bellows seal
Type of end connections	Flanges or welding ends
Plug/piston	Standard or balanced Soft seal, metal seal or high-performance metal seal
Characteristic	Equal percentage, linear, mod. linear or on/off
Actuator	Type 3271 or Type 3277 (see Data Sheets ▶ T 8310-1, ▶ T 8310-2 and ▶ T 8310-3)
Fail-safe action	Fail-close or fail-open
Process medium	Density in lb/cu.ft or kg/m³ and temperature in °F or °C
Flow rate	lbs/h or kg/h or cu.ft/min or m³/h in standard or operating state
Pressure	p_1 and p_2 in bar or psi (absolute pressure p_{abs}), with minimum, normal and maximum flow rate
RFID tag	Yes/No
Valve accessories	Positioner and/or limit switch

Associated Information Sheet	▶ T 8000-X
Associated Data Sheets for pneumatic actuators	▶ T 8310-1 to ▶ T 8310-3
Associated Mounting and Operating Instructions	▶ EB 8004-GR

2026-08-28 | English | 4000466642 | 1.8